ORDER NO. MB9502003C2

Service Manual

Compact Disc Player

Compact Disc Player

SL-PG570A

Colour

(K) : Black

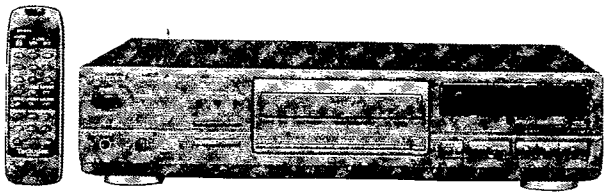

Areas

Suffix for Model No.	Area	Colour
(E)	Europe	(K)
(EB)	Britain	
(EG)	Germany and Italy	
(ER)	Hungary	
(EZ)	Poland and Russia	

RAE1100Z MECHANISM SERIES

Specifications

■ Audio

No. of channels	2 (left and right, stereo)
Frequency response	2 – 20,000 Hz, ± 0.5 dB
Output voltage	2 V (at 0 dB)
Dynamic range	96 dB
S/N	100 dB
Harmonic distortion	0.0035% (1 kHz, 0 dB)
Total harmonic distortion	0.004% (1 kHz, 0 dB)
Wow and flutter	Below measurable limit
DA converter	MASH (1 bit)
Output impedance	1 kΩ
Load impedance	More than 10 kΩ
Headphone output level	15 mW max. 32 Ω (adjustable)

■ Pickup

Wavelength	780 nm
Laser Power	No hazardous radiation is emitted (with safety protection)

■ General

Power consumption	13 W
Power supply	AC 50/60 Hz, 230 – 240 V
Dimensions (W × H × D)	430 × 103 × 286 mm
Weight	3.5 kg

Notes:

Specifications are subject to change without notice.
Weight and dimensions are approximate.

This apparatus was produced to BS 800.

*
• MASH is a trademark of NTT.

⚠WARNING

This service information is designed for experienced repair technicians only and is not designed for use by the general public. It does not contain warnings or cautions to advise non-technical individuals of potential dangers in attempting to service a product.
Products powered by electricity should be serviced or repaired only by experienced professional technicians. Any attempt to service or repair the product or products dealt with in this service information by anyone else could result in serious injury or death.

Technics®

© 1995 Matsushita Electric Industrial Co., Ltd.
All rights reserved. Unauthorized copying and distribution is a violation of law.

■ Contents

	Page
• Handling Precautions for Traverse Deck	2
• Precaution of Laser Diode	2, 3
• Accessories	3
• Connections	3
• Caution for AC Mains Lead	4
• Location of Controls	5
• Basic Operating Procedure	6
• Operation Check and Main Component Replacement Procedures	7~13
• Automatic Adjustment Results Display Function	14
• Schematic Diagram	15~20
• Printed Circuit Board Diagram	21, 22
• Wiring Connection Diagram	23
• Block Diagram	24, 25
• Troubleshooting Guide	26, 27
• Function of IC Terminals	28~30
• Replacement Parts List	31~37
• Cabinet Parts Location	34, 35
• Loadiong Unit Parts Location	36
• Packaging	37

■ Handing Precautions for Traverse Deck

The laser diode in the traverse deck (optical pickup) may break down due to potential difference caused by static electricity of clothes or human body. So, be careful of electrostatic breakdown during repair of the traverse deck (optical pickup).

• Handling of traverse deck (optical pickup)

1. Do not subject the traverse deck (optical pickup) to static electricity as it is extremely sensitive to electrical shock.
2. To prevent the breakdown of the laser diode, an anti-static shorting pin is inserted into the flexible board (FFC board).
   When removing or connecting the short pin, finish the job in as short time as possible.
3. Take care not to apply excessive stress to the flexible board (FFC board).
4. Do not turn the variable resistor (laser power adjustment). It has already been adjusted.

• Grounding for electrostatic breakdown prevention

1. Human body grounding
   Use the anti-static wrist strap to discharge the static electricity from your body.
2. Work table grounding
   Put a conducive material (sheet) or steel sheet on the area where the traverse deck (optical pickup) is placed, and ground the sheet.

Caution:
The static electricity of your clothes will not be grounded through the wrist strap. So, take care not to let your clothes touch the traverse deck (optical pickup).

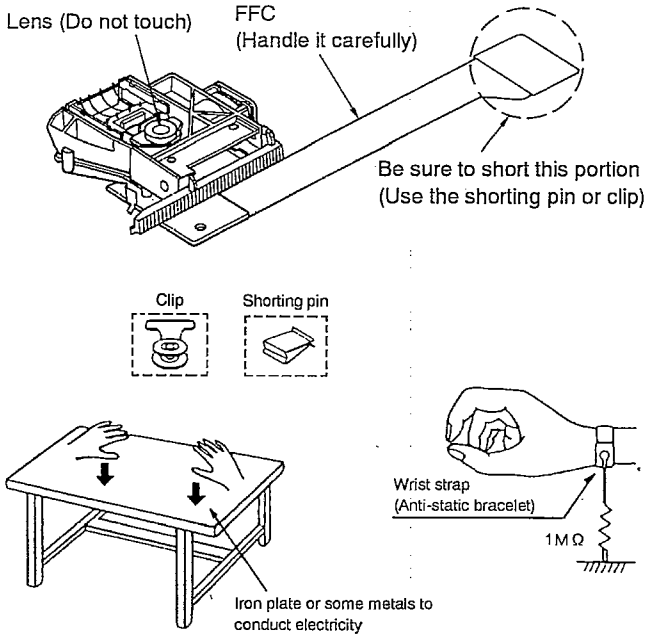

■ Precaution of Laser Diode

CAUTION: This product utilizes a laser diode with the unit turned "on", invisible laser radiation is emitted from the pick up lens.
Wave length: 780 nm
Maximum output radiation power from pick up: 100 μW/VDE

Laser radiation from the pick up unit is safety level, but be sure the followings:

1. Do not disassemble the pick up unit, since radiation from exposed laser diode is dangerous.
2. Do not adjust the variable resistor on the pick up unit. It was already adjusted.
3. Do not lock at the focus lens using optical instruments.
4. Recommend not to lock at pick up lens for a long time.

ACHTUNG: Dieses produkt enthält eine laserdiode. Im eingeschalteten zustand wird unsichtbare laserstrahlung von der lasereinheit adgestrahit.
Wellenlänge: 780 nm
Maximale strahlungsleistung der laserinhelt: 100 μW/VDE

Die strahlung an der lasereinheit ist ungefährlich, wenn folgende punkte beachtet werden:

1. Die lasereinheit nicht zerlegen, da die strahlung an der freigelegten laserdiode gefähriich ist.
2. Den werksseitig justierten einstellregler der lasereinreit nicht verstellen.
3. Nicht mit optischen instrumenten in die fokussierlinse blicken.
4. Nicht über längere zeit in die fokussierlinse blicken.

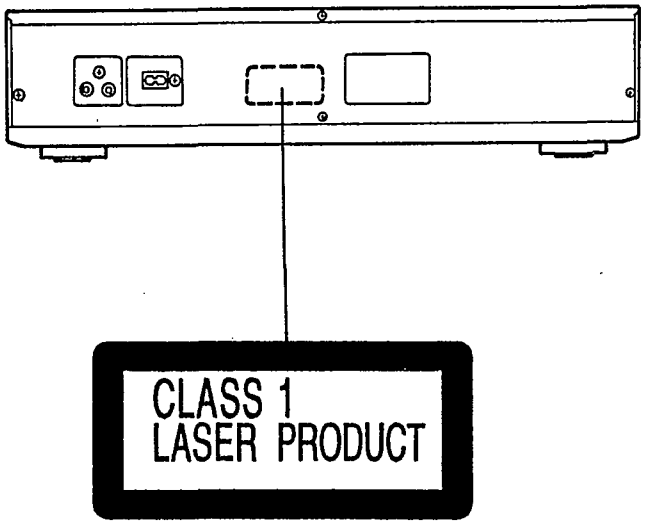

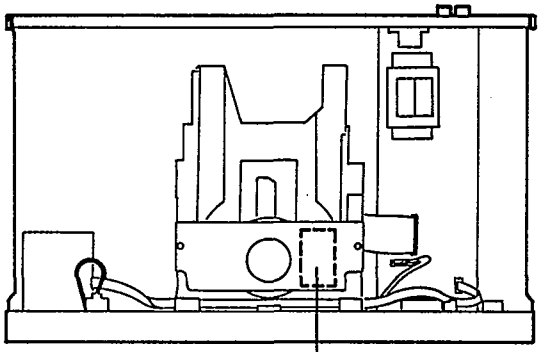

DANGER	INVISIBLE LASER RADIATION WHEN OPEN. AVOID DIRECT EXPOSURE TO BEAM.
ADVARSEL	USYNLIG LASERSTRÅLING VED ÅBNING, NÅR SIKKERHEDSAFBRYDERE ER UDE AF FUNKTION. UNDGÅ UDSÆTTELSE FOR STRÅLING.
VAROI	AVATTAESSA JA SUOJALUKITUS OHITETTAESSA OLET ALTTIINA NÄKYMÄTÖNTÄ LASERSÄTEILYLLE. ÄLÄ KATSO SÄTEESEEN.
VARNING	OSYNLIG LASERSTRÅLNING NÄR DENNA DEL ÄR ÖPPNAD OCH SPÄRREN ÄR URKOPPLAD. BETRAKTA EJ STRÅLEN.
ADVARSEL	USYNLIG LASERSTRÅLING NÅR DEKSEL ÅPNES OG SIKKERHEDSLÅS BRYTES. UNGÅ EKSPONERING FOR STRÅLEN.
VORSICHT	UNSICHTBARE LASERSTRAHLUNG WENN ABDECKUNG GEÖFFNET. NICHT DEM STRAHL AUSSETZEN. RQLS0101-1

■ Accessories

AC mains lead ..... 1 pc.
(For United Kingdom: RJA0044-C) (For others: RJA0043-C)

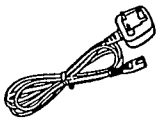

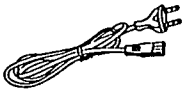

Remote control ..... 1 pc.
(EUR643900)

Stereo connection cable ..... 1 pc.
(SJP2276)

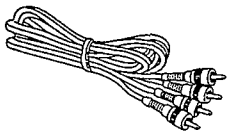

Battery for remote control ..... 2 pcs.
(UM-4, AAA, R03)

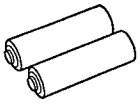

■ Connections

Before making connections, be sure that the power of this unit and all other system components is first turned off.

Note

Although the figure below shows the AC mains lead being connected to a household mains outlet, if the amplifier (or receiver) is equipped with a mains outlet, connect the lead to that outlet.

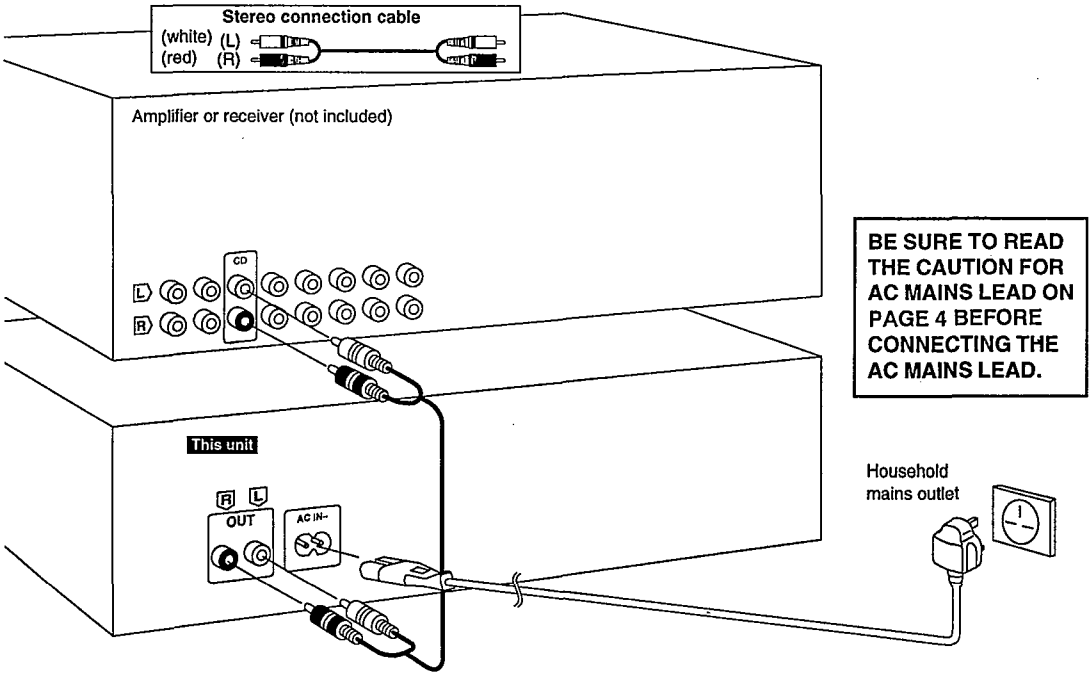

BE SURE TO READ THE CAUTION FOR AC MAINS LEAD ON PAGE 4 BEFORE CONNECTING THE AC MAINS LEAD.

■Caution for AC Mains Lead (For United Kingdom)

("EB" area code model only)

For your safety, please read the following text carefully.

This appliance is supplied with a moulded three pin mains plug for your safety and convenience.
A 5-ampere fuse is fitted in this plug.
Should the fuse need to be replaced please ensure that the replacement fuse has a rating of 5-ampere and that it is approved by ASTA or BSI to BS1362.
Check for the ASTA mark ⟐ or the BSI mark ♡ on the body of the fuse.

If the plug contains a removable fuse cover you must ensure that it is refitted when the fuse is replaced.
If you lose the fuse cover the plug must not be used until a replacement cover is obtained.
A replacement fuse cover can be purchased from your local dealer.

CAUTION!
IF THE FITTED MOULDED PLUG IS UNSUITABLE FOR THE SOCKET OUTLET IN YOUR HOME THEN THE FUSE SHOULD BE REMOVED AND THE PLUG CUT OFF AND DISPOSED OF SAFELY.
THERE IS A DANGER OF SEVERE ELECTRICAL SHOCK IF THE CUT OFF PLUG IS INSERTED INTO ANY 13-AMPERE SOCKET.

If a new plug is to be fitted please observe the wiring code as shown below.
If in any doubt please consult a qualified electrician.

IMPORTANT

If the socket outlets in the home are not suitable for the plug supplied with this appliance it should be cut off and an appropriate three pin plug fitted.
The wires in this mains lead are coloured in accordance with the following code:

Blue:	Neutral
Brown:	Live

Do not connect either wire to the earth terminal in the plug which is marked by the letter "E" or by the safety earth symbol ⏚ or coloured green or green-and-yellow.
As the colours of the wires in the mains lead of this apparatus may not correspond with the coloured markings identifying the terminals in your plug proceed as follows. The wire which is coloured BLUE must be connected to the terminal which is marked with the letter N or coloured BLACK.

The wire which is coloured BROWN must be connected to the terminal which is marked with the letter L or coloured RED.

Before use

Remove the connector cover as follows.

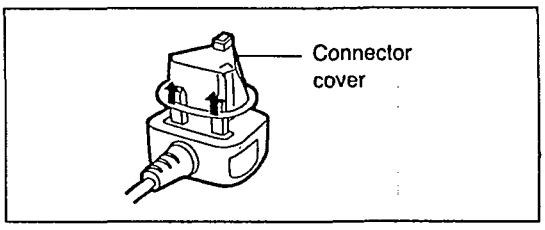

How to replace the fuse

1. Open the fuse cover with a screwdriver.

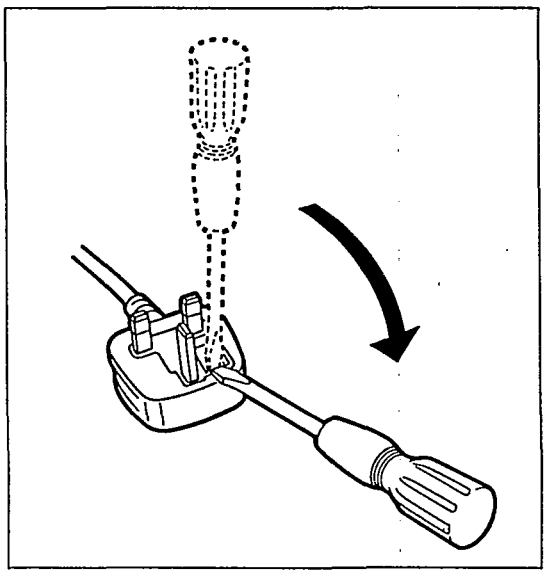

2. Replace the fuse and close or attach the fuse cover.

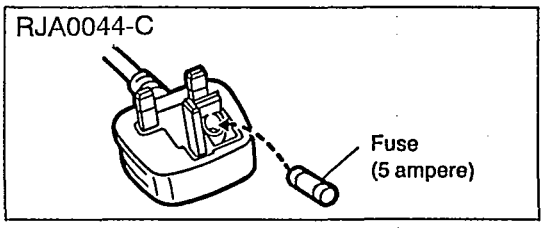

■ Location of Controls

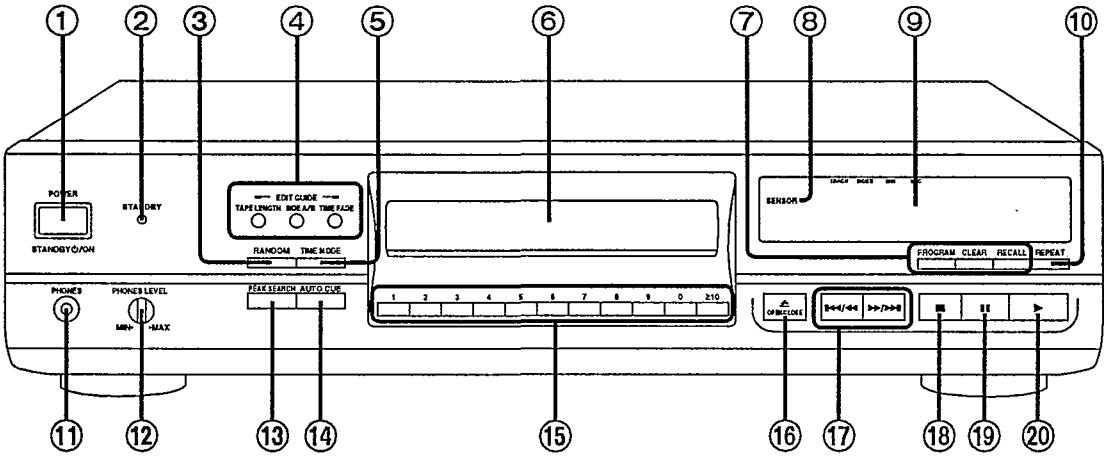

No.	Name
①	**Power "STANDBY ⏻/ON" switch (POWER, STANDBY ⏻/ON)** Press to switch the unit from on to standby mode or vice versa. In standby mode, the unit is still consuming a small amount of power.
②	**Standby indicator (STANDBY)** When the unit is connected to the AC mains supply, this indicator lights up in standby mode and goes out when the unit is turned on.
③	**Random play button (RANDOM)**
④	**CD edit record buttons (EDIT GUIDE)**
	•Tape length button (TAPE LENGTH)
	•Tape side select button (SIDE A/B)
	•Time fade button (TIME FADE)
⑤	**Time mode select button (TIME MODE)**
⑥	**Disc tray**
⑦	**Program play buttons**
	•Program button (PROGRAM)
	•Clear button (CLEAR)
	•Recall button (RECALL)
⑧	**Remote control signal sensor (SENSOR)**
⑨	**Display panel**
⑩	**Repeat button (REPEAT)**

No.	Name
⑪	**Headphones jack (PHONES)** (ϕ 6.3, 32 Ω)
⑫	**Headphones volume level knob (PHONES LEVEL)**
⑬	**Peak search button (PEAK SEARCH)**
⑭	**Auto cue button (AUTO CUE)**
⑮	**Numeric buttons (1–9, 0, ≥10)**
⑯	**Disc tray open/close button (⏏ OPEN/CLOSE)**
⑰	**Skip/Search buttons (⏮/◀◀, ▶▶/⏭)**
⑱	**Stop button (■)**
⑲	**Pause button (❚❚)**
⑳	**Play button (▶)**

■ Basic Operating Procedure

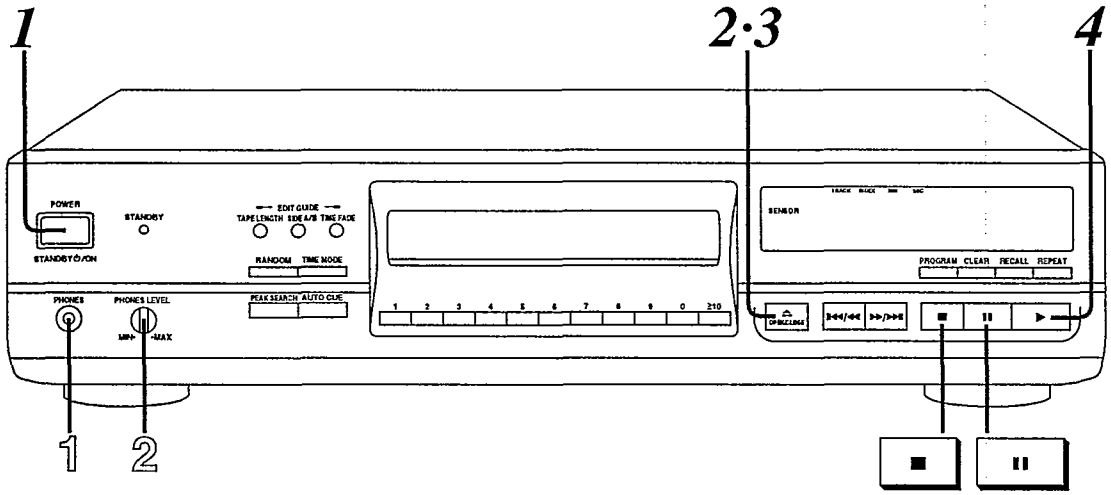

1 POWER STANDBY/ON

Press POWER (Power goes on).

no dISC

- This indicates that a CD has not been installed.
- If a CD is already in the disc tray, it automatically begins playing from the first track.

2 OPEN/CLOSE

Press ▲ OPEN/CLOSE to open the tray and insert a disc.

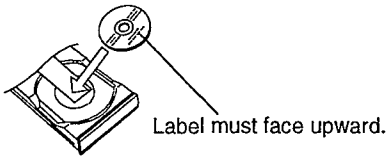

3 OPEN/CLOSE

Press ▲ OPEN/CLOSE to close the tray.

Total number of tracks Total playing time

12 56:08

Displayed if there are 17 or more tracks on the disc

4

Press ▶ (Play begins).

Play stops automatically after all tracks have been played.

Index number
(If there is none, "/" is displayed.)

Track currently playing Elapsed time

1 1 0:01

Illuminates.

To stop the disc play:

Press ■.

To temporarily stop the disc play:

Press ❚❚.

1 1 0:12

Illuminates.

To continue playback, press ▶.

Notes

- The displayed total playing time includes the time between tracks. For this reason, the time may be several seconds longer than that which appears on song cards and the like.
- When you use the timer with other unit, be sure to turn this unit on.

For your reference:

- If you skip step 3 and press ▶, the tray automatically closes and play begins from the first track.

To listen with headphones

1 PHONES

Connect headphones (not included).

- Lower the volume before connecting.
- Plug type: Large stereo type

2 PHONES LEVEL MIN MAX

Adjust the volume with the PHONES LEVEL.

To make louder: Turn toward the right.
To make lower: Turn toward the left.

Note

Avoid listening for prolonged periods of time to prevent hearing damage.

■ Operetion Check and Main Component Replacement Procedures

Warning: This product uses a laser diode. Refer to caution statements on page 2.
ACHTUNG: • Die lasereinheit nicht zerlegen.
• Die lasereinheit dart nur gegen eine vom hersteller speziferte einheit ausgetauscht werden.
"ATTENTION SERVICER" Some chassis components may have sharp edges. Be careful when disassembling and servicing.

NOTE

1. **This section describes procedures for checking the operation of the major printed circuit boards and replacing the main components.**
2. **For reassembly after operation checks or replacement, reverse the respective procedures. Special reassembly procedures are described only when required.**
3. **Select items from the following index when checks or replacement are required.**
4. **Illustrated screws are equivalent to actual size.**
5. **Refer the parts No. on the page of "Main component Replacement Procedures", if necessary.**

• Contents

• Checking Procedure for each P.C.B. Page
1.Checking for the main P.C.B., operation P.C.B. and headphones jack P.C.B.. 7
2.Checking for the servo P.C.B.. 9

• Main Component Replacement Procedures
1.Replacement for the traverse unit ass'y. 10
2.Replacement for the loading belt and loading motor. 13

■ Checking Procedure for each P.C.B.

1. Checking for the main P.C.B., operation P.C.B. and headphones jack P.C.B.

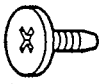
ⓐ
[RHD30035–K1] (Black)

ⓑ
[XTBS3+8JFZ1] (Black)

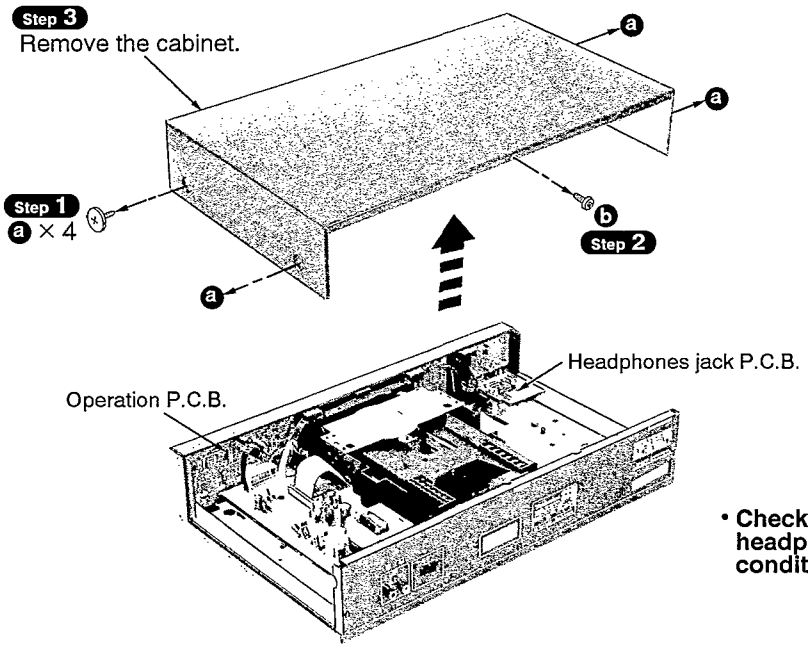

• **Check the operation P.C.B. and headphones jack P.C.B. in this condition.**

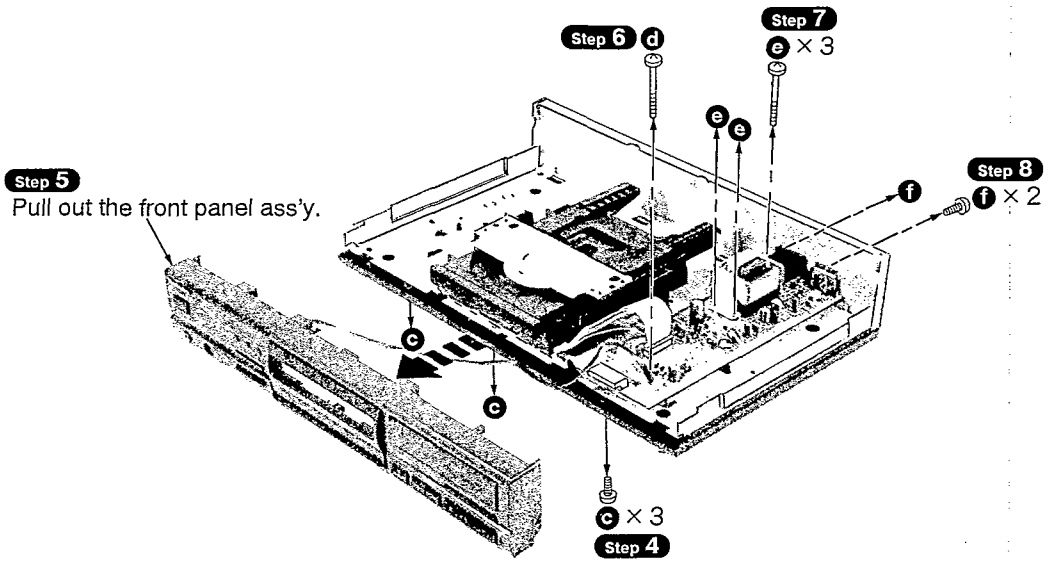

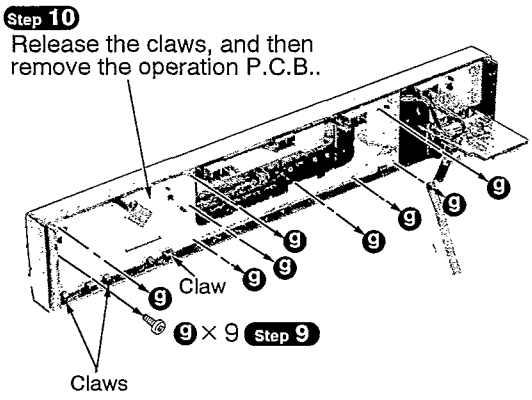

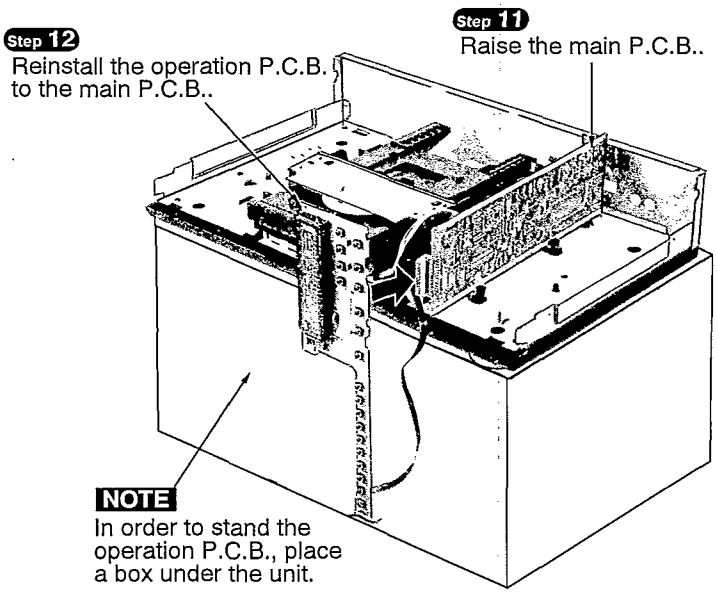

• **Check the main P.C.B. as shown below.**

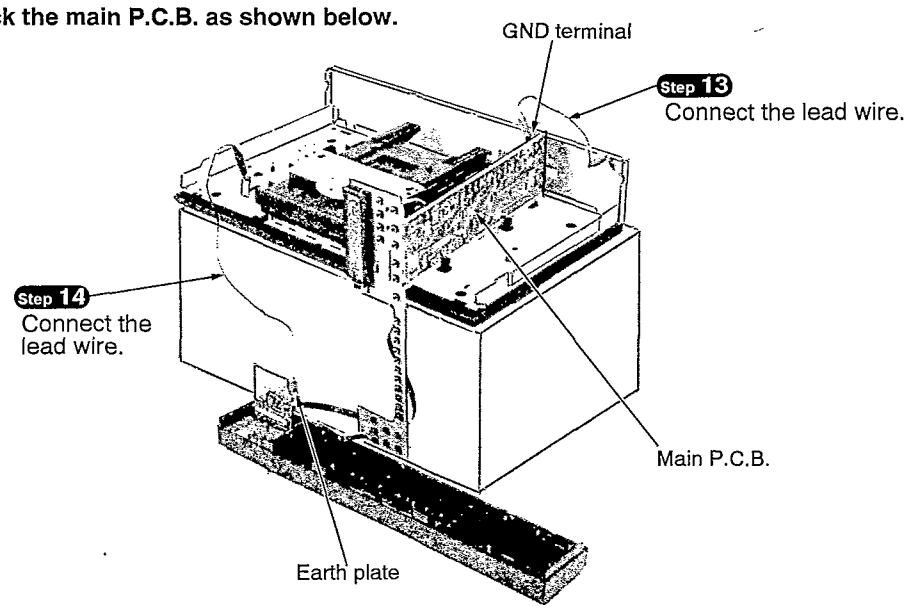

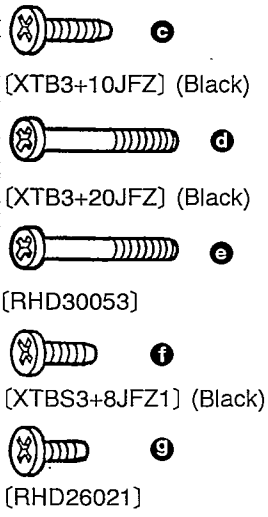

2. Checking for the servo P.C.B.

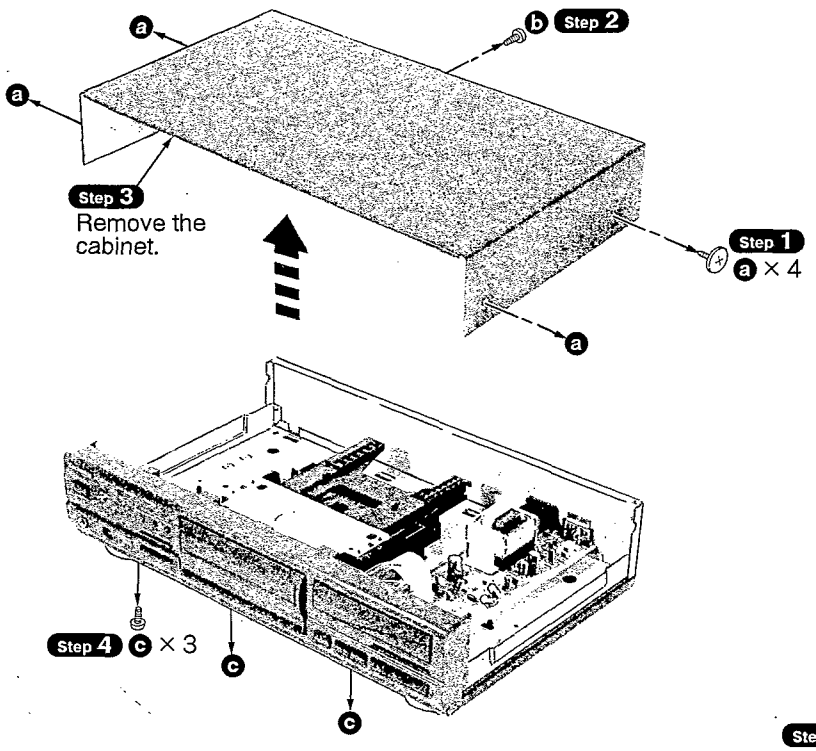

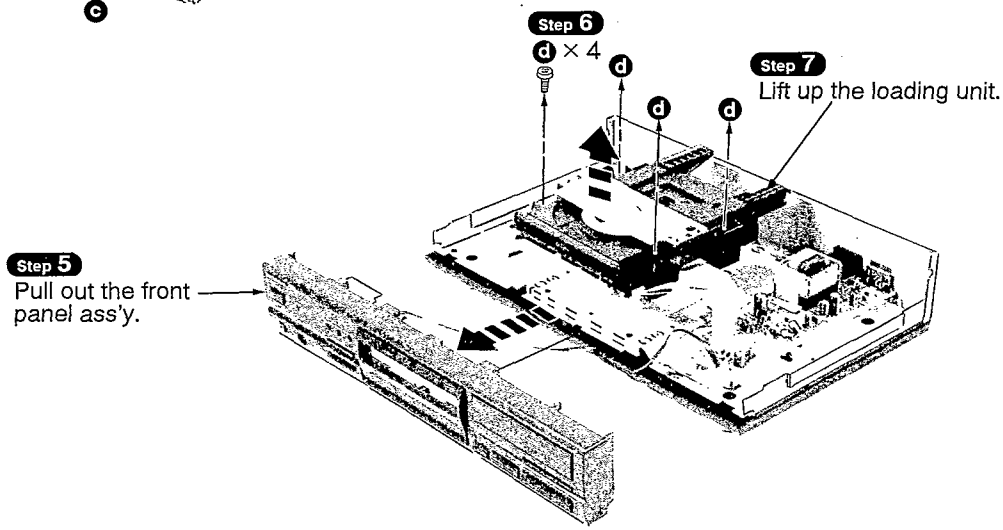

• **Check the servo P.C.B. as shown below.**

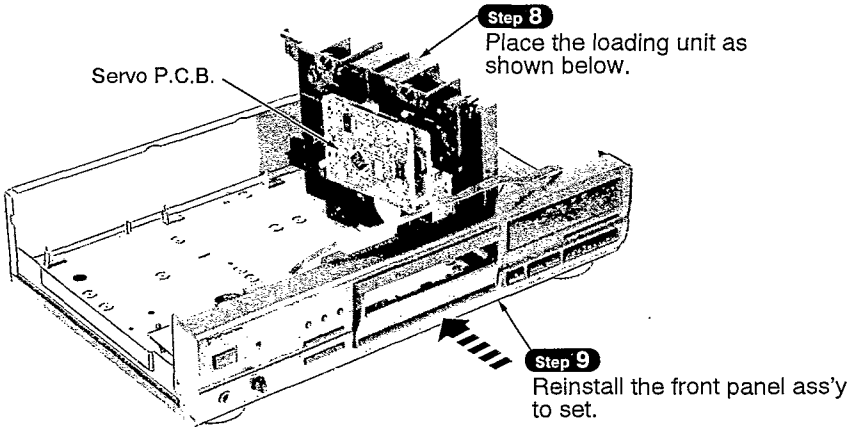

a
[RHD30035–K1] (Black)

b
[XTBS3+8JFZ1] (Black)

c
[XTB3+10JFZ] (Black)

d
[XTB3+8JFZ] (Black)

■ Main Component Replacement Procedures

1. Replacement for the traverse unit ass'y

- Follow the Step 1 ~ Step 7 of item 2 in checking procedure for each P.C.B. on page 9.

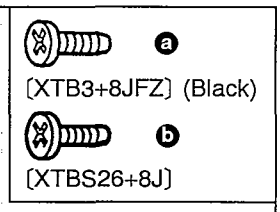

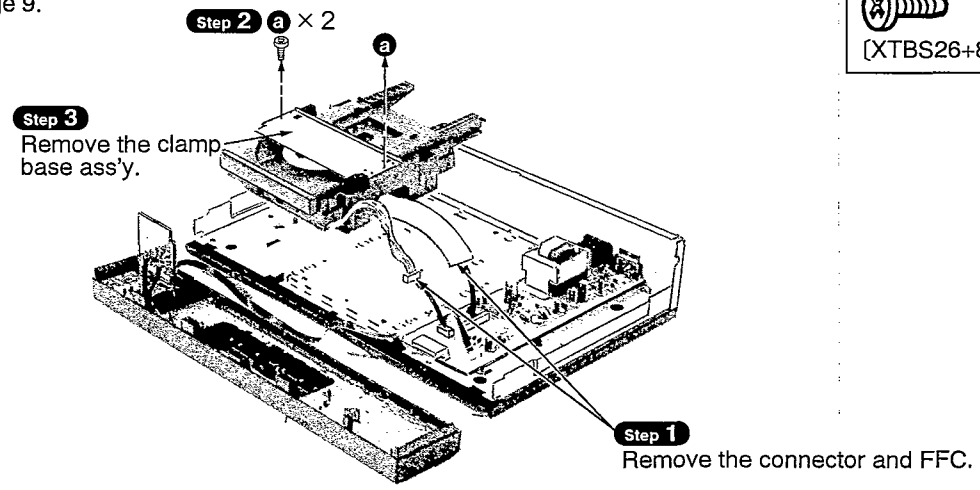

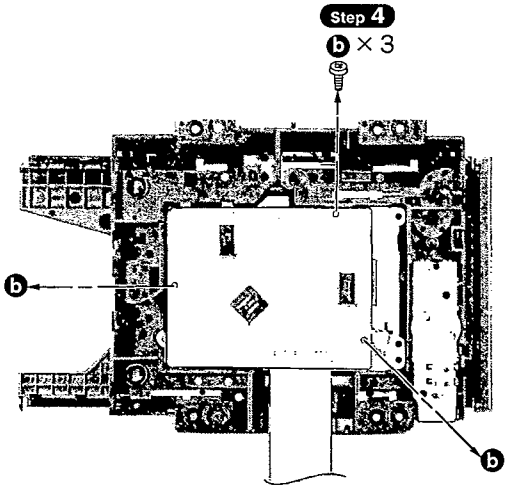

■ **Removal of the FFC**

- Push the top of the connector in the direction of arrow ①, and then pull out the FFC in the direction of arrow ②.

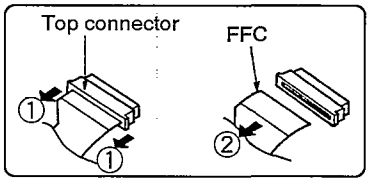

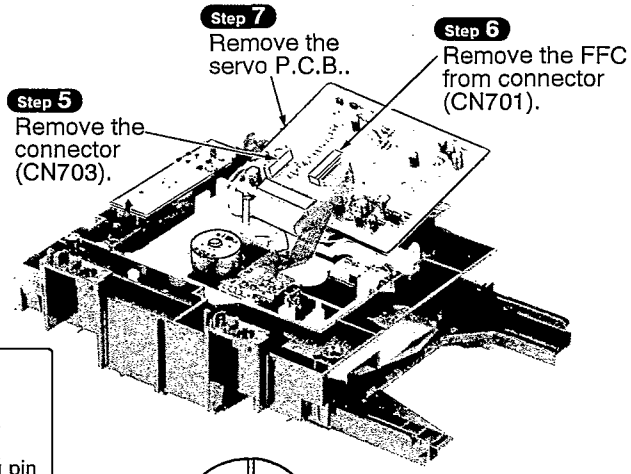

NOTE

Insert a shorting pin into the traverse unit FFC. (Refer to Handing Precautions for Traverse Deck on page 2.)

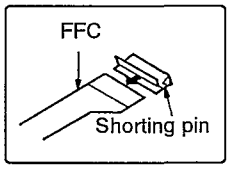

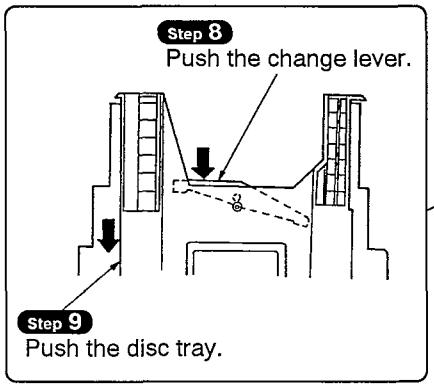

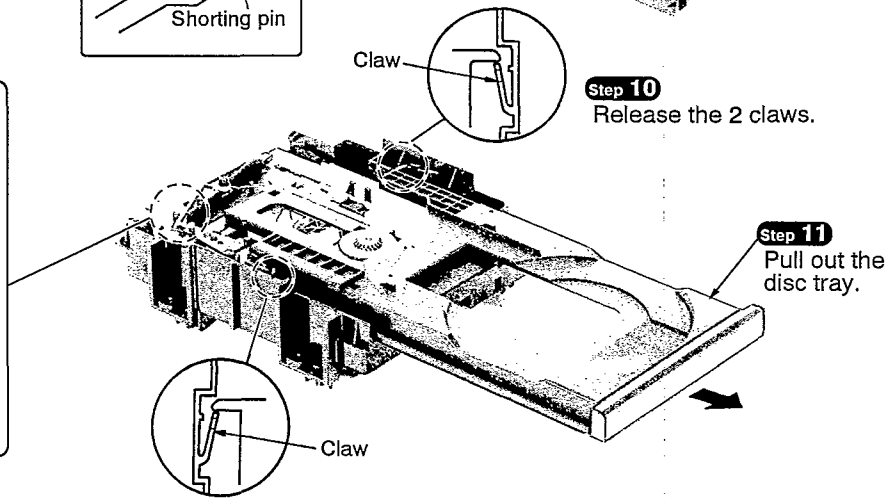

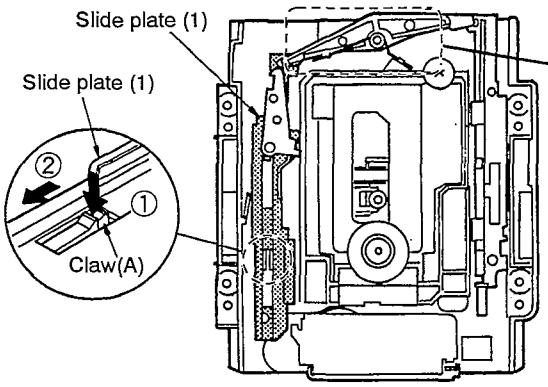

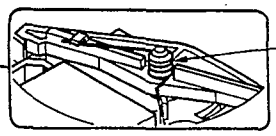

Step 12
Remove the spring.

NOTE
Be careful not to damage the claw (A) because the claw (A) is breakable.

Step 13
Push the claw (A) in the direction of arrow ①, and then move the side plate (1) in the direction of arrow ②.

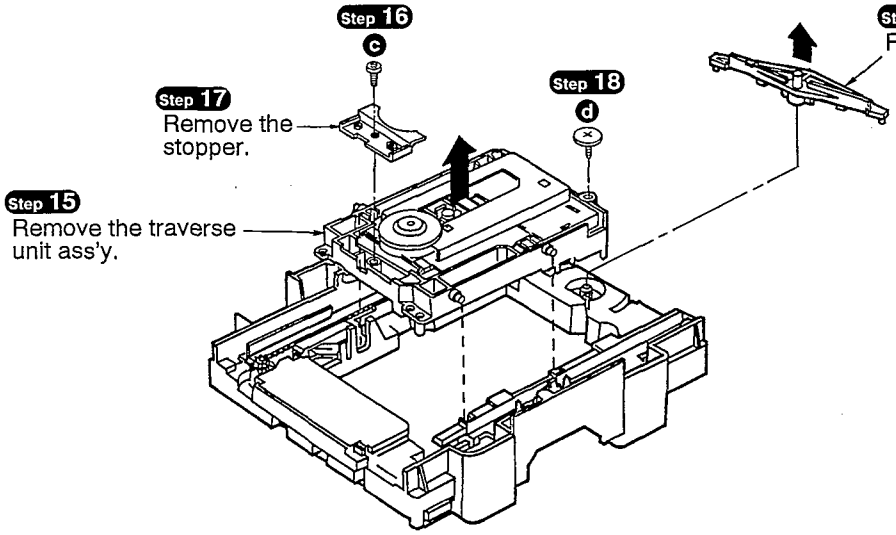

Step 14
Remove the change lever.

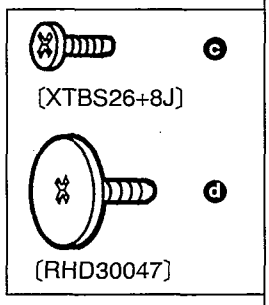

Step 20
Remove the damping rubber from traverse chassis.

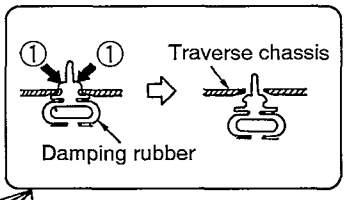

Step 19
Remove the lead wire from clamper.

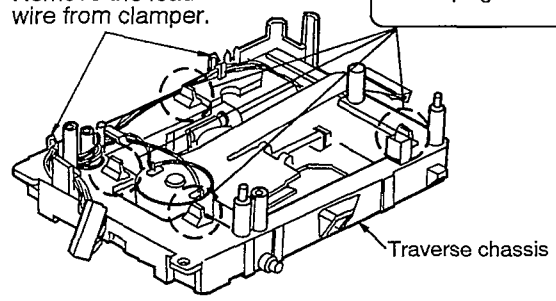

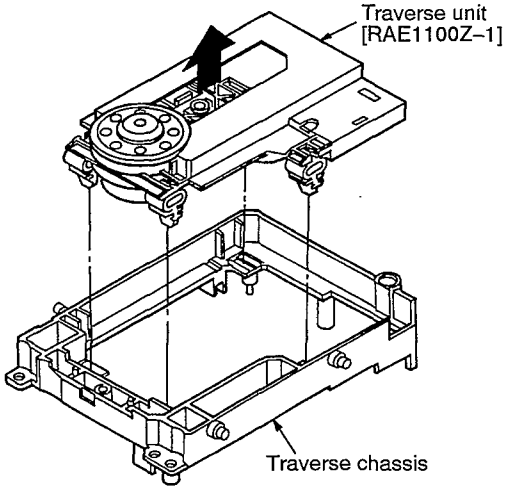

Installation of the disc tray after replacement

Step 1
Slide the drive rack fully in the direction of arrow.

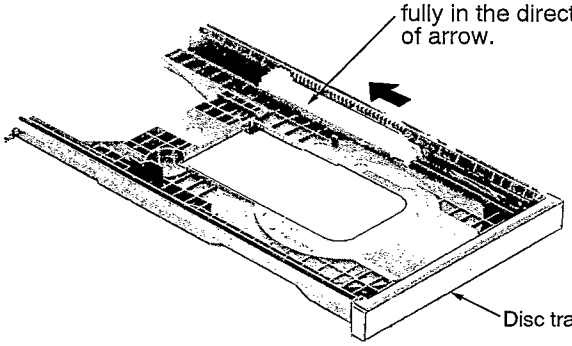

Step 2
Slide the change lever, and then leave the traverse unit ass'y falling.

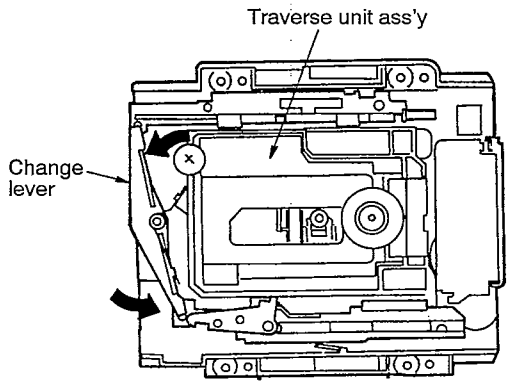

Step 3
Align the disc tray groove with the mechanism chassis rib.

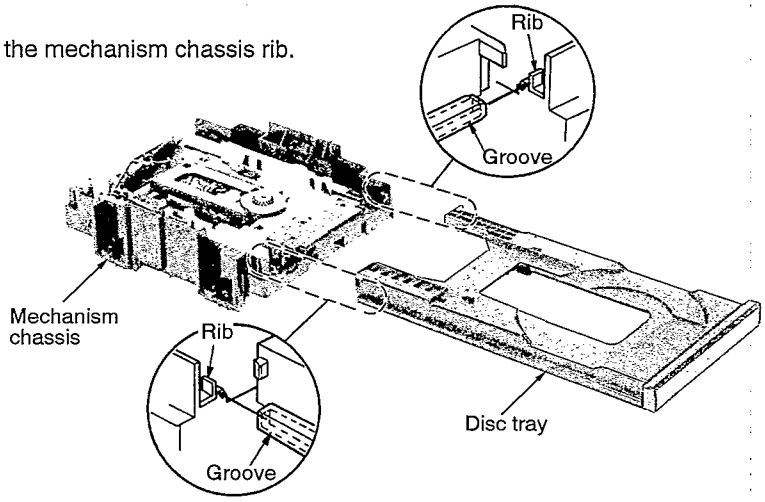

Step 4
Slide the disc tray in the direction of arrow. Then, put the drive rack manually so that the drive gear (1) engages with the drive rack gear.

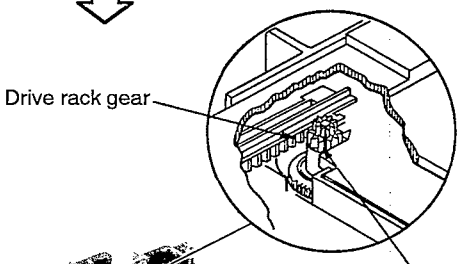

Step 5
Afrer the drive gear (1) engaged with the drive rack gear, slide the disc tray.

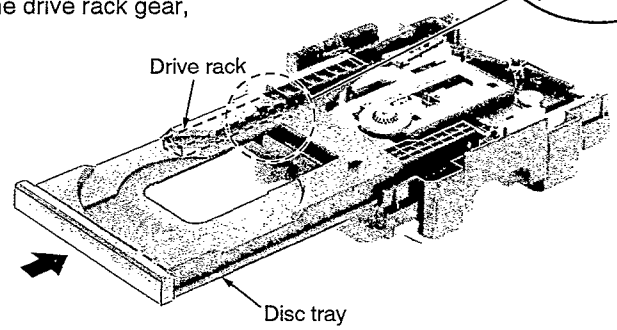

2. Replacement for the loading belt and loading motor

- Follow the Step 1 ~ Step 7 of item 2 in checking procedure for each P.C.B. on page 9.
- Follow the Step 1 ~ Step 11 of item 1 in main component replacement procedures on page 10.

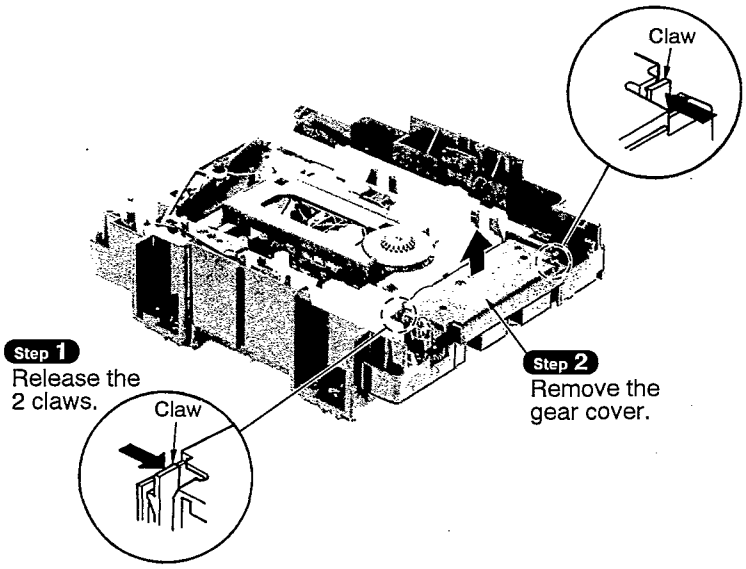

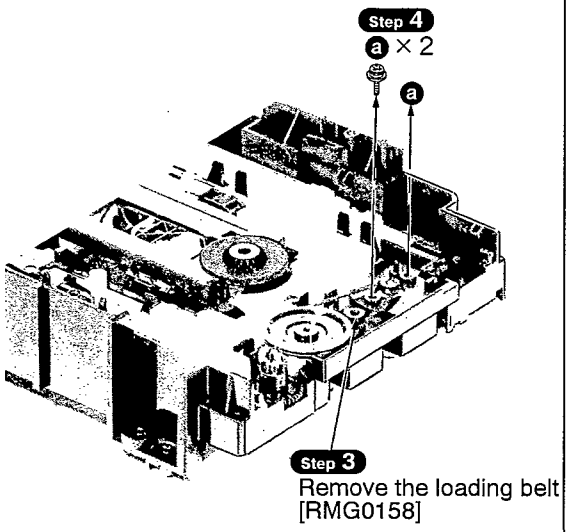

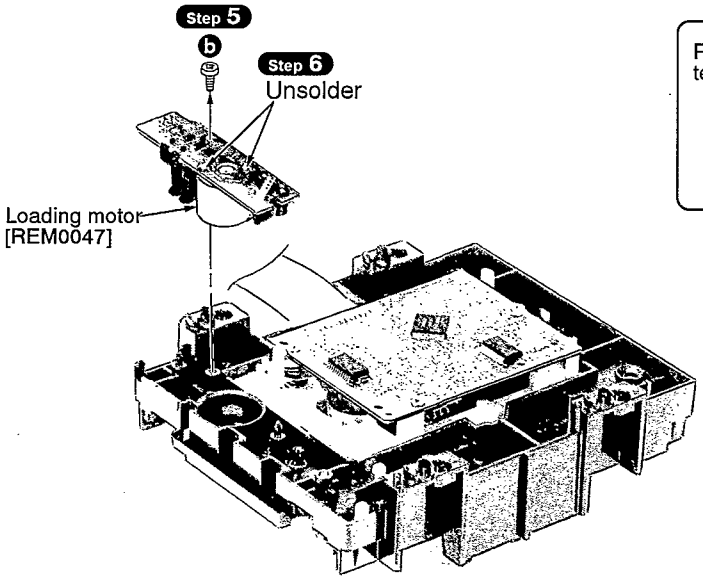

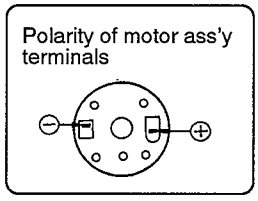

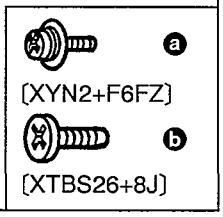

■ Automatic Adjustment Results Display Function

(Self-Check Function)

This unit has a function that uses the FL display board to indicate the results of automatic adjustment of the servo-circuit (tracking, focus, offset, etc.) as error codes. The error code display indicates the location of failures from automatic adjustment circuit.
The following procedure displays the error codes from the self-diagnostic function.

● Procedure for displaying automatic adjustment codes

1. Plug in the power cord and wait for the STANDBY LED to flash, indicating the unit is in standby status.
2. Turn on the power supply switch while pressing the STOP (■), PAUSE (❚❚) and PLAY (▶) buttons at the same time.
3. The "F-E-C-" code is displayed 2 or 3 seconds later to indicate the automatic adjustment results mode.
4. Push the OPEN/CLOSE button to open the disc tray and then load the test disc (SZZP1054C).
5. Push the OPEN/CLOSE button again to close the disc tray.
6. After automatic adjustment, the code display indicates the location of failures in the servo circuit.

● Troubleshooting using the automatic adjustment code

Notes:
1. If "E-00" or "E-02" is displayed as an error code, this means no error was found.
2. Check the disc and laser-detector lens for damage, contamination or stains.

● Take out the test disc and turn off the power, which terminates the automatic adjustment results mode.

FL error code display	Symptom	Probable cause	Signal to check		Normal voltage and waveform values	
			Location	Signal name	PLAY	STOP
E-01	Focus and tracking offset adjustments not completed in specified time period.	① Clocks X1 and X2, power supply VDD, and reset/RST, all on IC702. ② MDATA, MCLK, MLD, and SENSE signals to/from mechanism controller.	IC702 ⑧ pin	MDATA	PLAY 5V 0V T= 25 ms.	4.8V
			IC702 ⑦ pin	MCLK	PLAY 5V 0V T=13.6 ms.	4.8V
			IC702 ⑨ pin	MLD		
			IC702 ⑩ pin	SENSE	0V	0V
			IC702 ⑱ pin	/RST	4.9V	4.9V
			IC702 ⑱ pin	X1	3.2 Vp-p F=16.9344 MHz	3.2 Vp-p F=16.9344 MHz
			IC702 ⑲ pin	X2	1.6 Vp-p F=16.9344 MHz	1.6 Vp-p F=16.9344 MHz
E-03 E-05 E-07 E-09 E-0B E-0D E-0F	Disc play unstable	① Scratches or contaminants on disc surface ② Focus and Tracking servo circuits (check waveforms, voltages, and part values.) ③ Spindle driver circuit ④ Optical pickup	IC702 ㉜ pin	F E	PLAY 3 Vp-p 2 ms. 0.1 V/DIV.	2.4V
			IC702 ㉝ pin	T E	PLAY 400 mVp-p 2 ms. 0.2 V/DIV.	2.4V
			IC702 ㉘ pin	FOD	2.4V	2.4V
			IC702 ㉗ pin	TRD	2.4V	2.4V
			IC702 ㉖ pin	KICK	2.4V	2.4V
			IC702 ⑪ pin	/FLOCK	0V	4.9V
			IC702 ㊳ pin	/RF DET	0V	4.8V
			TJ701	R F	PLAY 0.6Vp-p 0.5 μs. 0.2 V/DIN	3.4V
			IC702 ⑰ pin	STAT	4.9V	0V
E-04 E-06 E-0C E-0E	Best "eye" (PD balance) adjustment not completed in specified time period.	① Scratches or contaminants on disc surface ② Focus and Tracking servo circuits (check waveforms, voltages, and part values.) ③ Optical pickup	IC702 ㉚ pin	FBAL	2.5V ± 1.25V	2.5V ± 1.25V
			TJ701	R F	PLAY 0.6Vp-p 0.5 μs. 0.2 V/DIN	3.4V
			IC702 ㉜ pin	F E	PLAY 3 Vp-p 2 ms. 0.1 V/DIV.	0V
			IC702 ㊱ pin	O F T	0V	0V
			IC702 ⑫ pin	/TLOCK	0V	0V
E-08 E-0A	Focus or Tracking gain adjustment not completed in specified time period.	① Scratches or contaminants on disc surface ② Focus and Tracking servo circuits (check waveforms, voltages, and part values.) ③ Optical pickup	IC702 ㉜ pin	F E	PLAY 3 Vp-p 2 ms. 0.1 V/DIV.	2.4V
			IC702 ㉝ pin	T E	PLAY 400 mVp-p 2 ms. 0.2 V/DIV.	2.4V
			IC702 ㊱ pin	O F T	0V	0V
			IC702 ⑫ pin	/TLOCK	0V	0V

■ Schematic Diagram

	Page
A SERVO CIRCUIT	16, 17
B REMOTE SENSOR/POWER SWITCH CIRCUIT	18
C OPERATION CIRCUIT	18
D LOADING MOTOR CIRCUIT	19
E MAIN CIRCUIT	18, 19
F HEADPHONES JACK CIRCUIT	20

- This schematic diagram may be modified at any time with the development of new technology.

Notes:

- **S601** : Time mode select switch (TIME MODE)
- **S602** : Auto cue switch (AUTO CUE)
- **S603** : Time fade switch (TIME FADE)
- **S604** : Peak level search switch (PEAK SEARCH)
- **S605** : Random play switch (RANDOM)
- **S606** : Numeric (1) switch
- **S607** : Numeric (2) switch
- **S608** : Numeric (3) switch
- **S609** : Numeric (4) switch
- **S610** : Numeric (5) switch
- **S611** : Numeric (0) switch
- **S612** : Numeric (9) switch
- **S613** : Numeric (8) switch
- **S614** : Numeric (7) switch
- **S615** : Numeric (6) switch
- **S618** : Tape-side select switch (SIDE A/B)
- **S619** : Edit tape length switch (TAPE LENGTH)
- **S620** : Numeric (≥10) switch
- **S621** : F. Skip switch (▶▶I)
- **S622** : Pause switch (❚❚)
- **S623** : Disc tray open/close switch (⏏ OPEN/CLOSE)
- **S624** : Program switch (PROGRAM)
- **S625** : Repeat switch (REPEAT)
- **S626** : Stop switch (■)
- **S627** : Play switch (▶)
- **S628** : R. Skip switch (I◀◀)
- **S629** : Clear switch (CLEAR)
- **S630** : Recall switch (RECALL)
- **S651** : Power "**STANDBY ⏻ /ON**" switch (POWER)
- **VR871** : Headphones level control
- *Indicated voltage values are the standard values for the unit measured by the DC electronic circuit tester (high-impedance) with the chassis taken as standard. Therefore, there may exist some errors in the voltage values, depending on the internal impedance of the DC circuit tester.*

  No mark : CD STOP
  ( ) : CD PLAY [1kHz, L + R, 0 dB]

- Important safety notice:
  Components identified by ⚠ mark have special characteristics important for safety.
  Furthermore, special parts which have purposes of fire-retardant (resistors), high-quality sound (capacitors), low-noise (resistors), etc. are used. When replacing any of components, be sure to use only manufacturer's specified parts shown in the parts list.

- **Caution!**
  IC and LSI are sensitive to static electricity.
  Secondary trouble can be prevented by taking care during repair.
  Cover the parts boxes made of plastics with aluminum foil.
  Ground the soldering iron.
  Put a conductive mat on the work table.
  Do not touch the legs of IC or LSI with the fingers directly.

- **Voltage and signal line**
  : Positive voltage line
  : Negative voltage line
  : CD signal Line

A SERVO CIRCUIT (P.C.Board : on page 21)

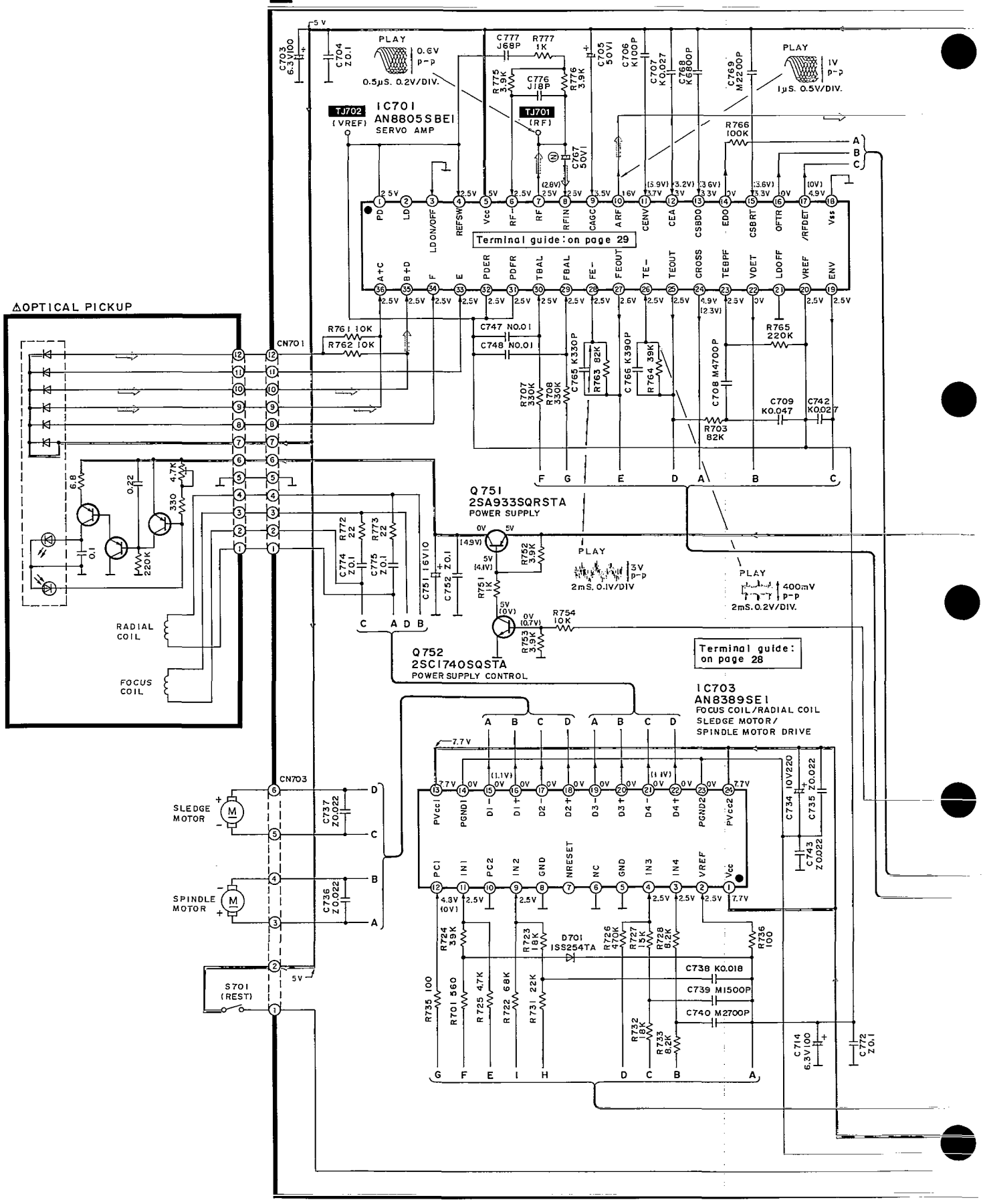

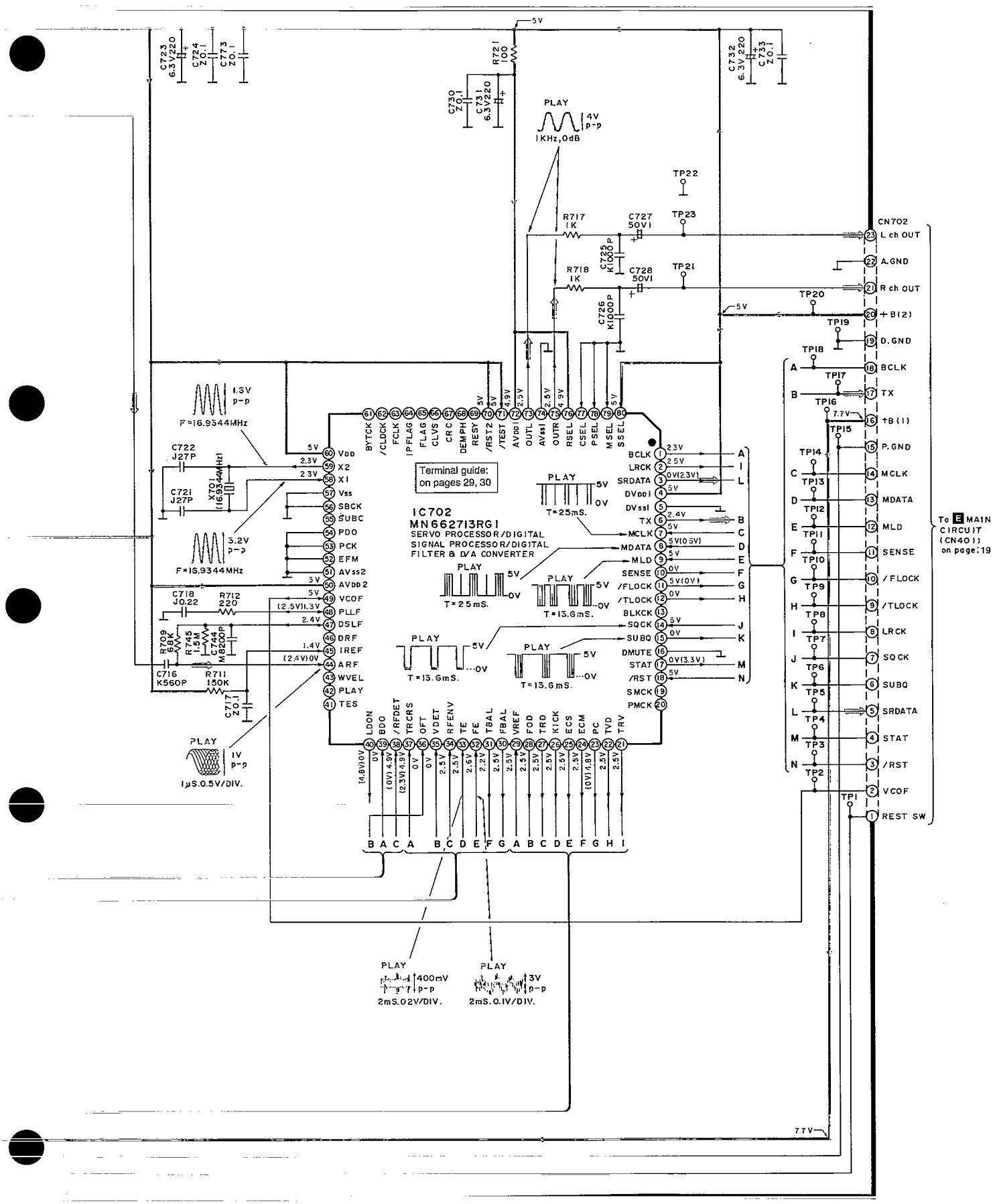
IC702
MN662713RG1
SERVO PROCESSOR/DIGITAL
SIGNAL PROCESSOR/DIGITAL
FILTER & D/A CONVERTER
Terminal guide:
on pages 29, 30
CN702
L ch OUT
A.GND
R ch OUT
+B(2)
D.GND
BCLK
TX
+B(1)
P.GND
MCLK
MDATA
MLD
SENSE
/FLOCK
/TLOCK
LRCK
SOCK
SUBQ
SRDATA
STAT
/RST
VCOF
REST SW
To E MAIN
CIRCUIT
(CN401)
on page:19
PLAY
1KHz,0dB
F=16.9344MHz
T=25mS.
T=15.6mS.
2mS.0.2V/DIV.
2mS.0.1V/DIV.
1μS.0.5V/DIV.

B POWER SWITCH CIRCUIT
(P.C.Board:on page 21)

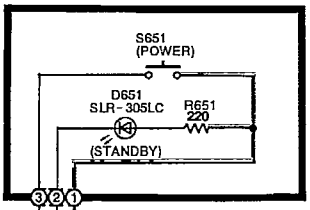

C OPERATION CIRCUIT (P.C.Board:on page 22)

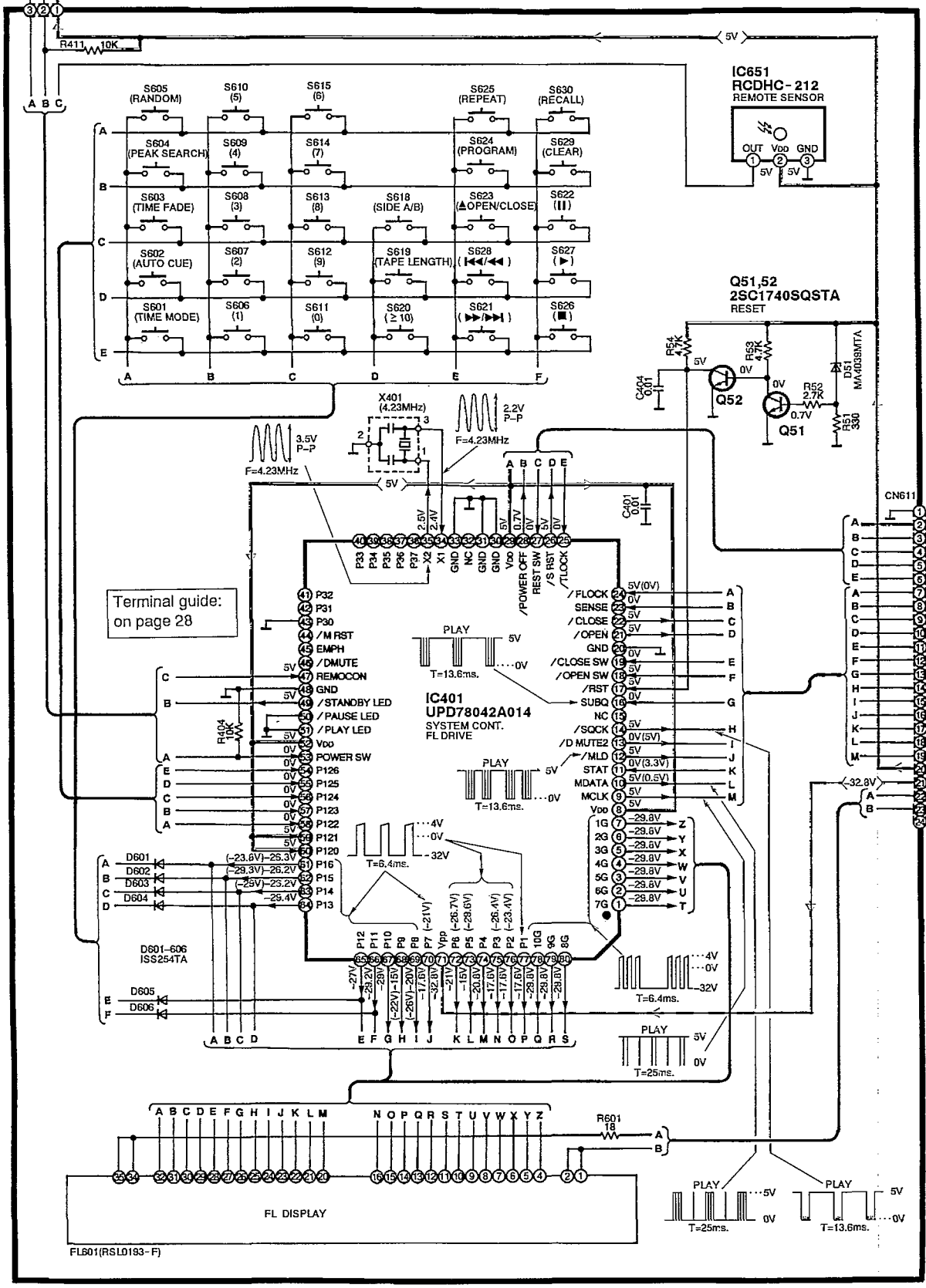

D LOADING MOTOR CIRCUIT
(P.C. Board: on page 21)

E MAIN CIRCUIT (P.C. Board: on page 22)

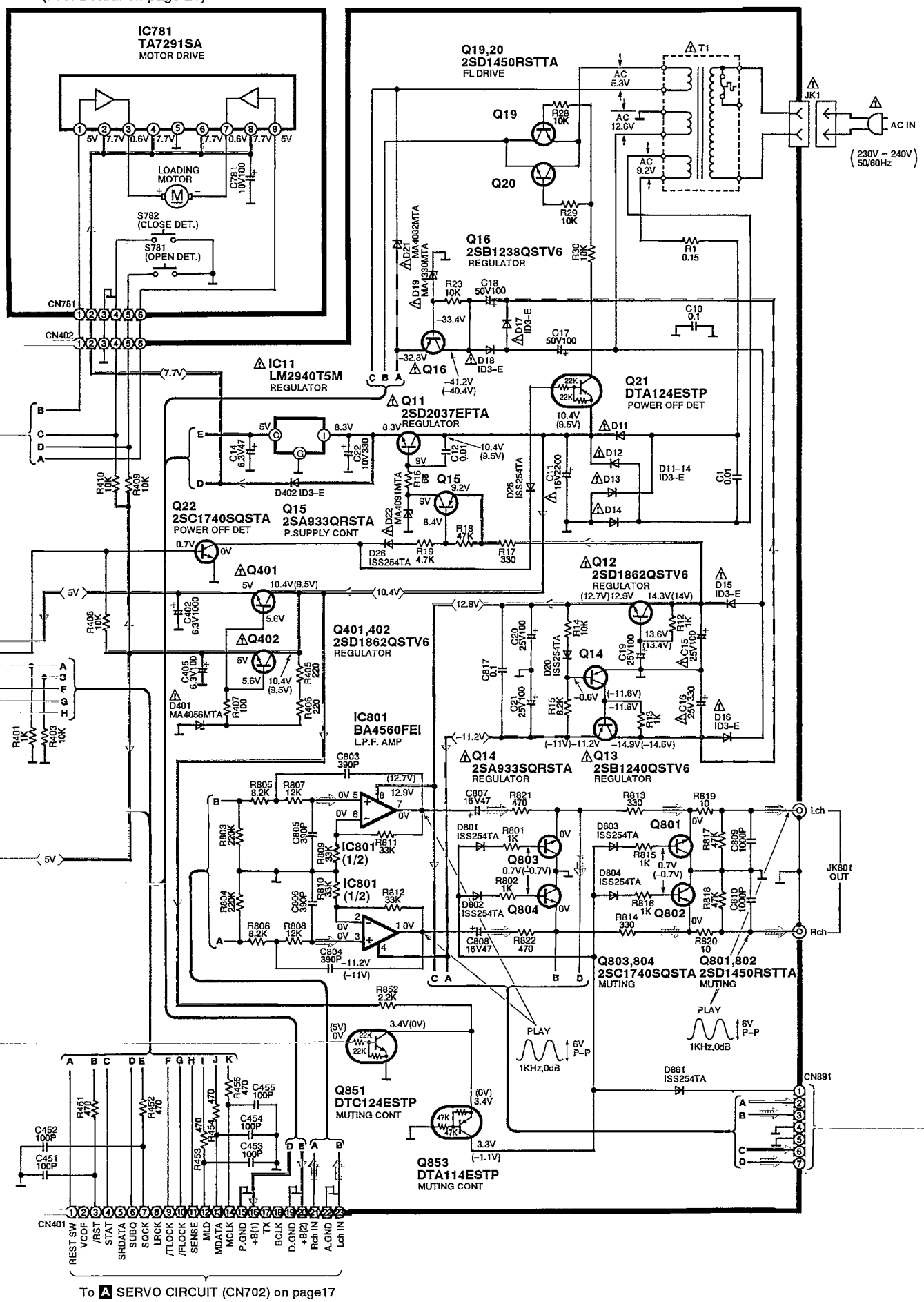

To A SERVO CIRCUIT (CN702) on page17

• Terminal guide of IC's, transistors and diodes

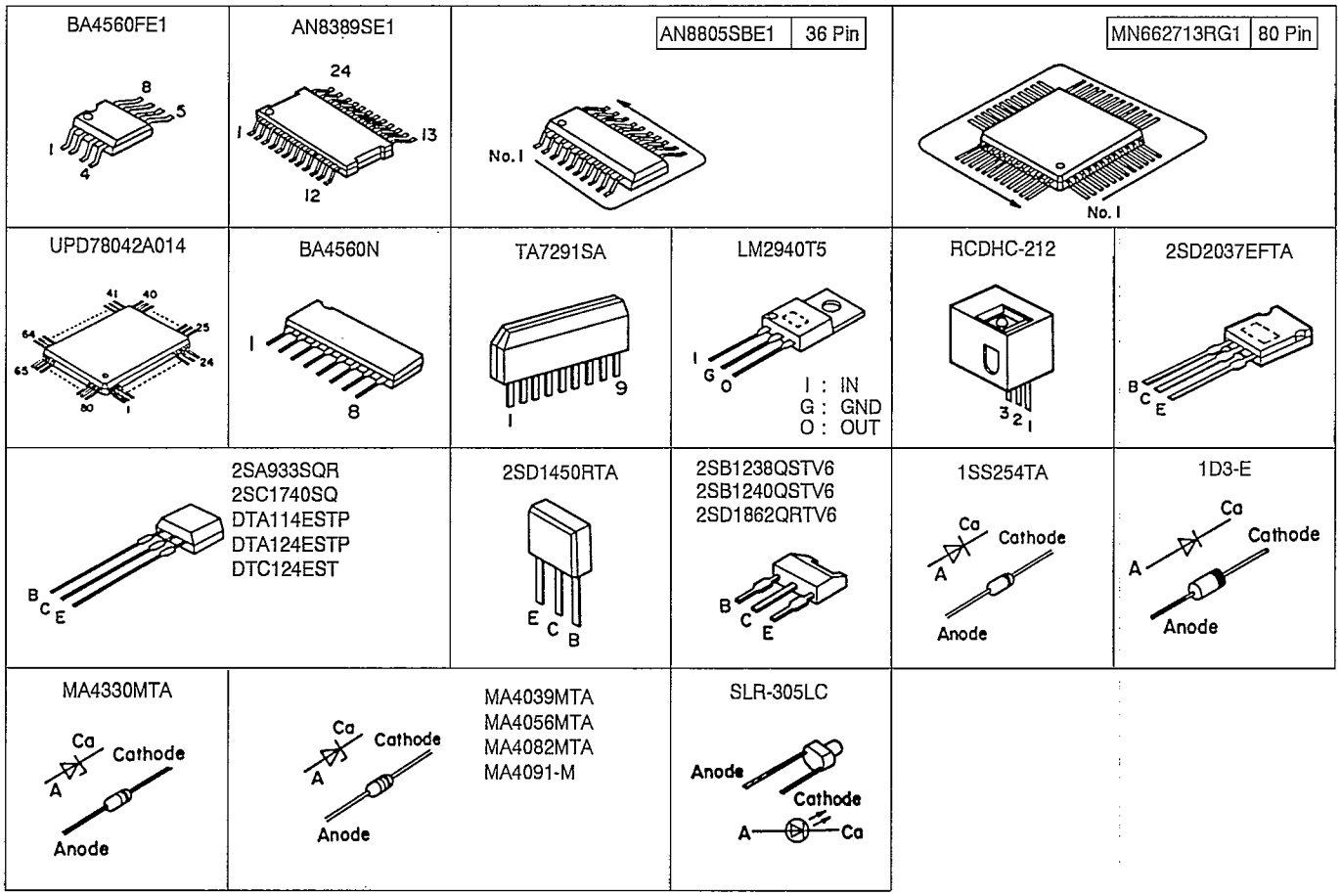

F HEADPHONES JACK CIRCUIT (P.C. Board: on page 21)

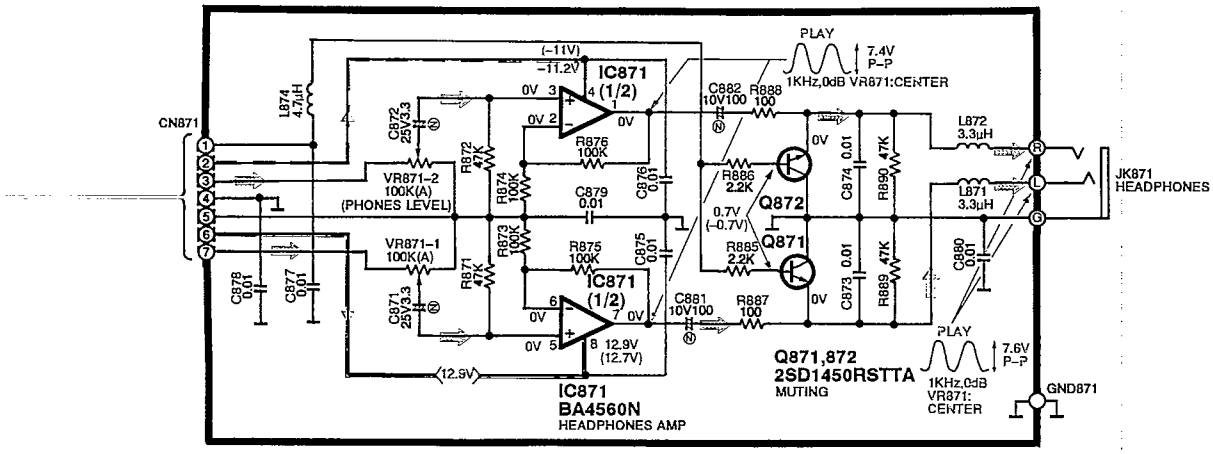

■ Printed Circuit Board Diagram

- This circuit board diagram may be modified at any time with the development of new technology.

A SERVO P.C.B.(REP1755A–N)

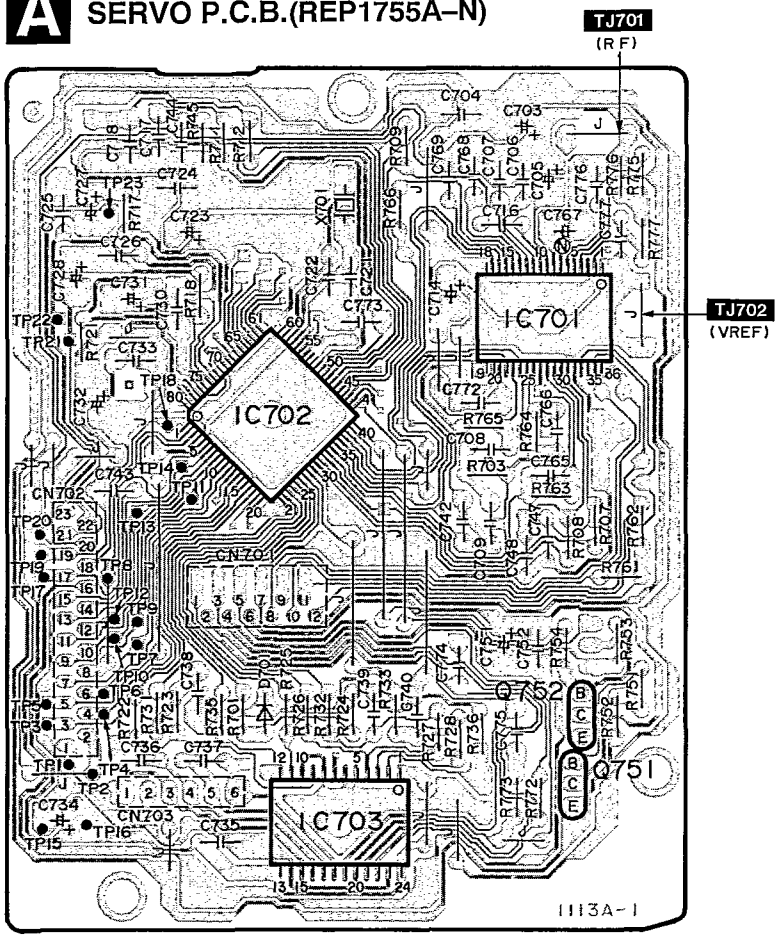

B POWER SWITCH P.C.B.(REP2085A–S)

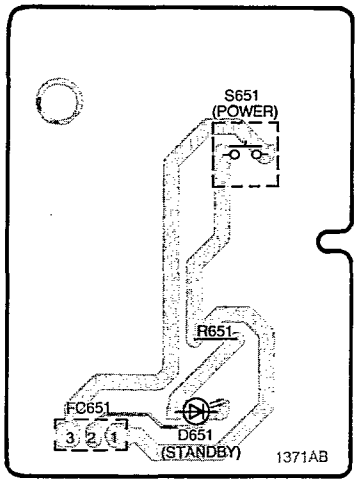

D LOADING MOTOR P.C.B.(REP1940A–N)

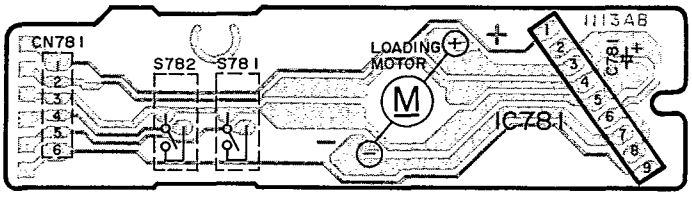

F HEADPHONES JACK P.C.B. (REP2086A–S)

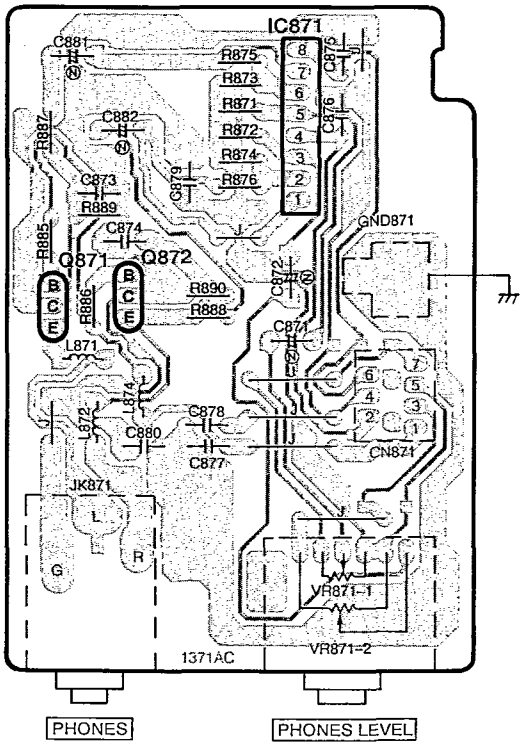

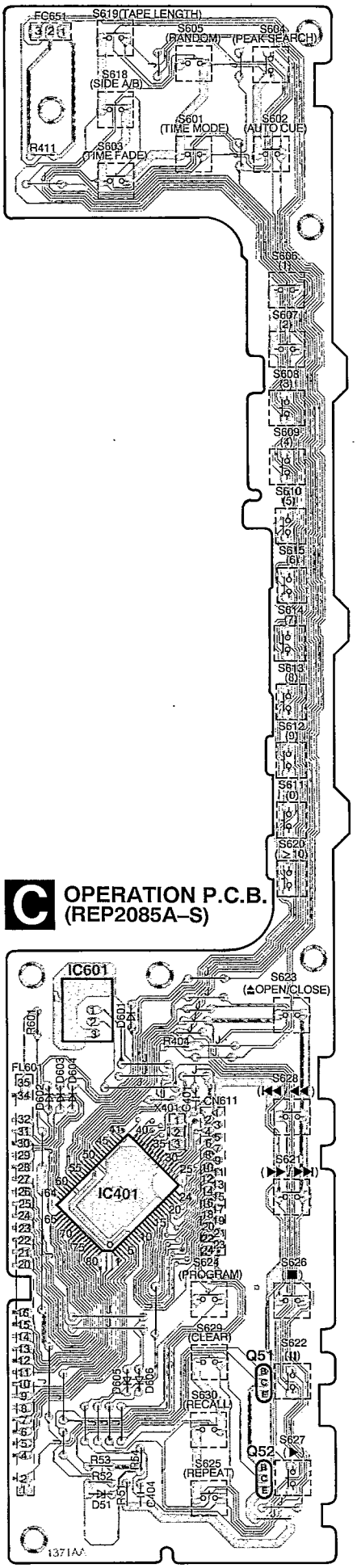

C OPERATION P.C.B. (REP2085A–S)

E MAIN P.C.B. (REP2084A–1M)

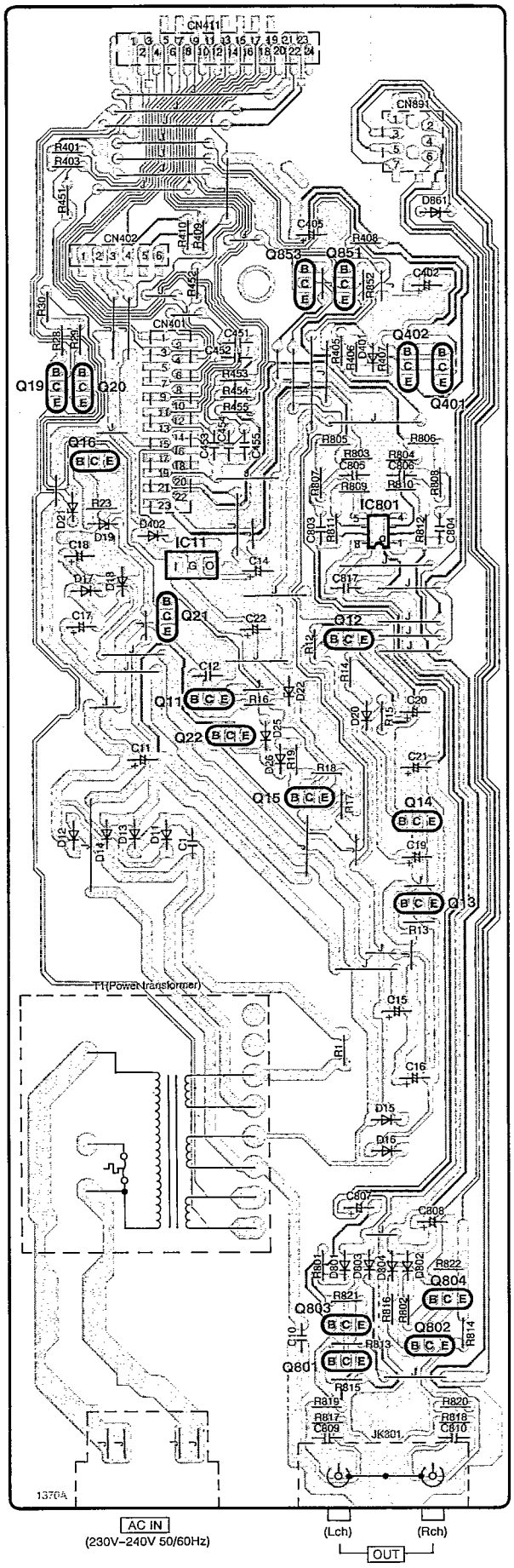

■ Wiring Connection Diagram

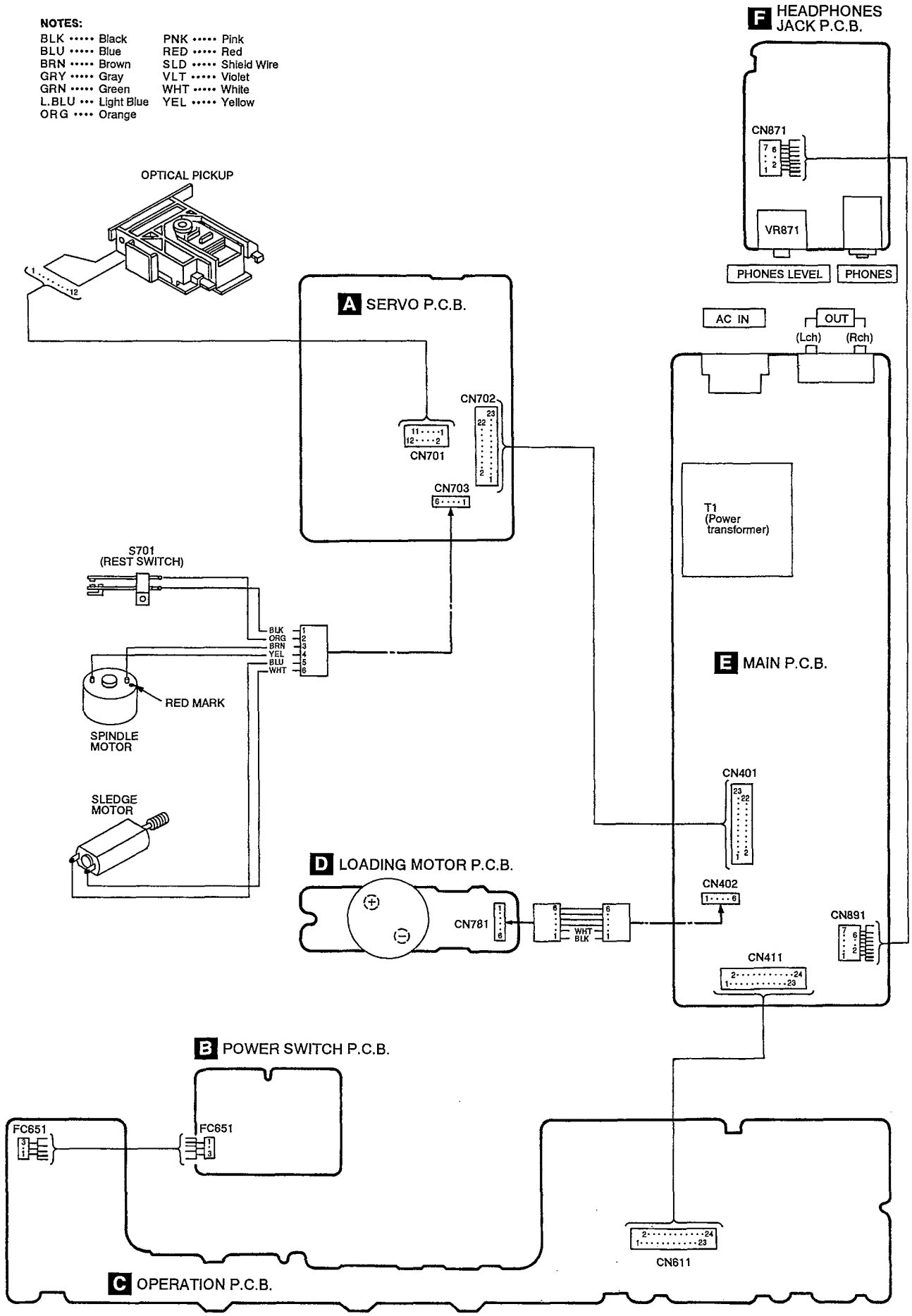

■ Block Diagram

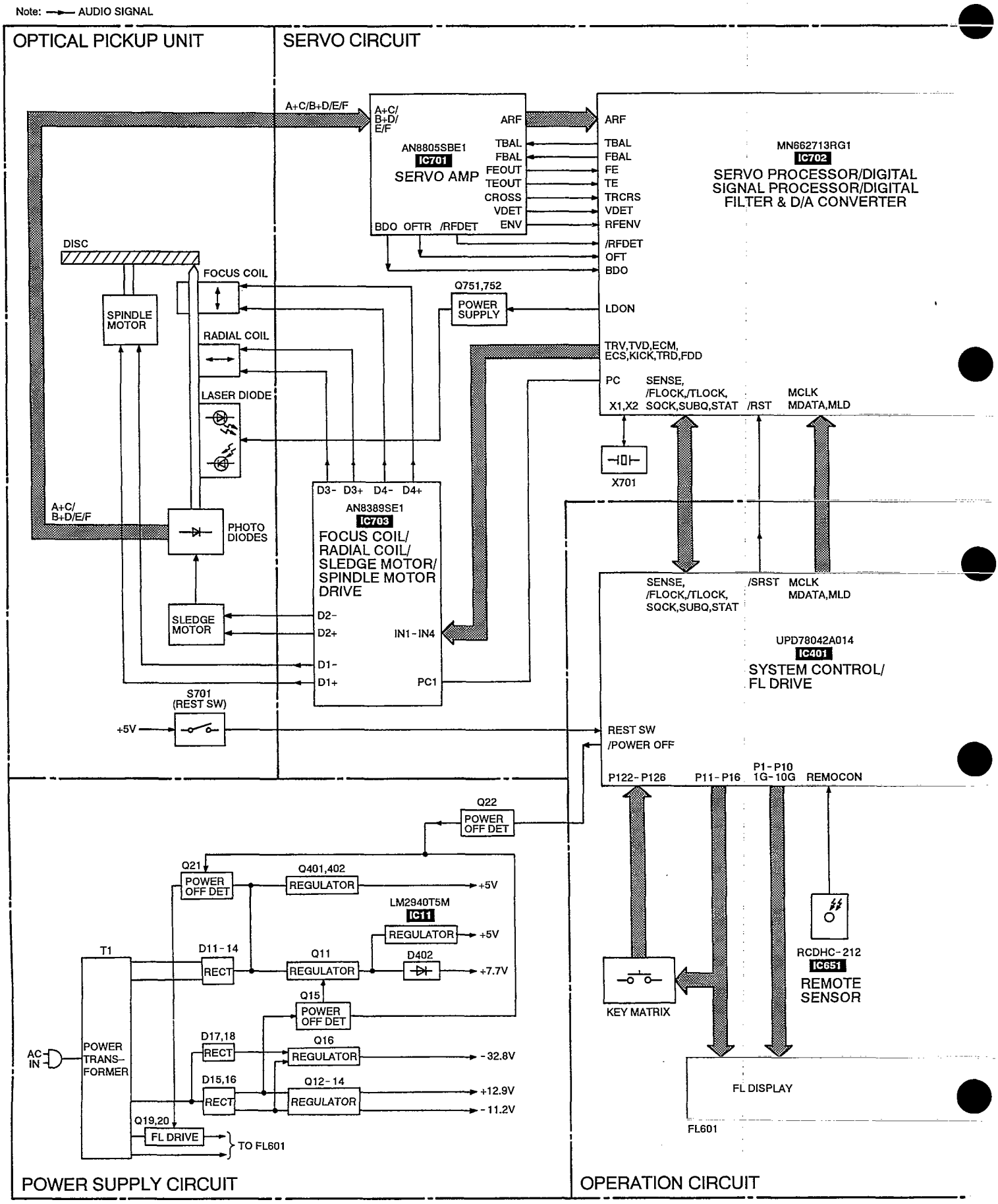

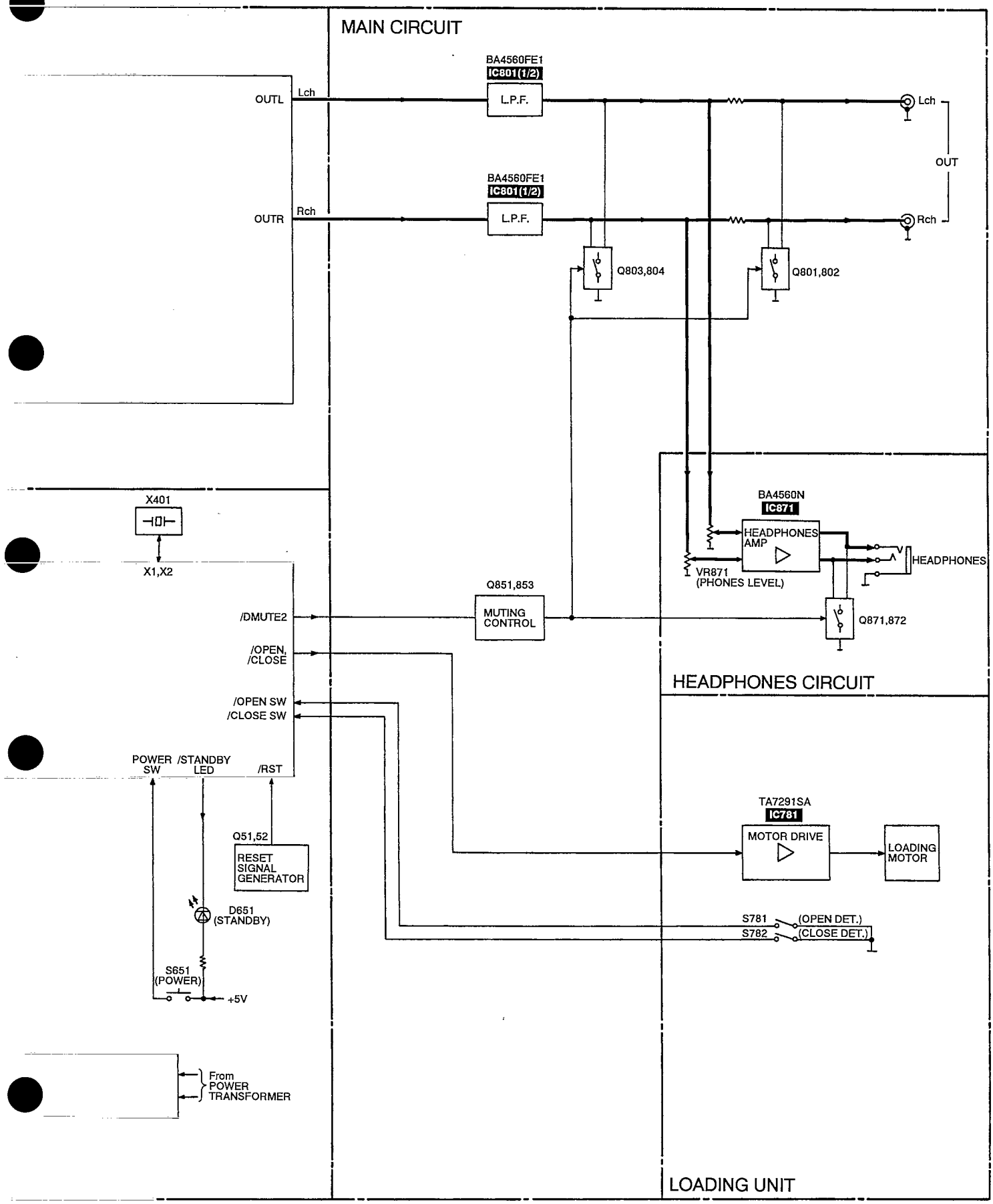
MAIN CIRCUIT
BA4560FE1
IC801(1/2)
L.P.F.
OUTL
Lch
BA4560FE1
IC801(1/2)
L.P.F.
OUTR
Rch
Lch
OUT
Rch
Q803,804
Q801,802
X401
X1,X2
BA4560N
IC871
HEADPHONES AMP
VR871
(PHONES LEVEL)
HEADPHONES
Q851,853
MUTING CONTROL
/DMUTE2
Q871,872
/OPEN,
/CLOSE
HEADPHONES CIRCUIT
/OPEN SW
/CLOSE SW
POWER SW
/STANDBY LED
/RST
TA7291SA
IC781
MOTOR DRIVE
LOADING MOTOR
Q51,52
RESET SIGNAL GENERATOR
D651
(STANDBY)
S781
S782
(OPEN DET.)
(CLOSE DET.)
S651
(POWER)
+5V
From POWER TRANSFORMER
LOADING UNIT

■ Troubleshooting Guide

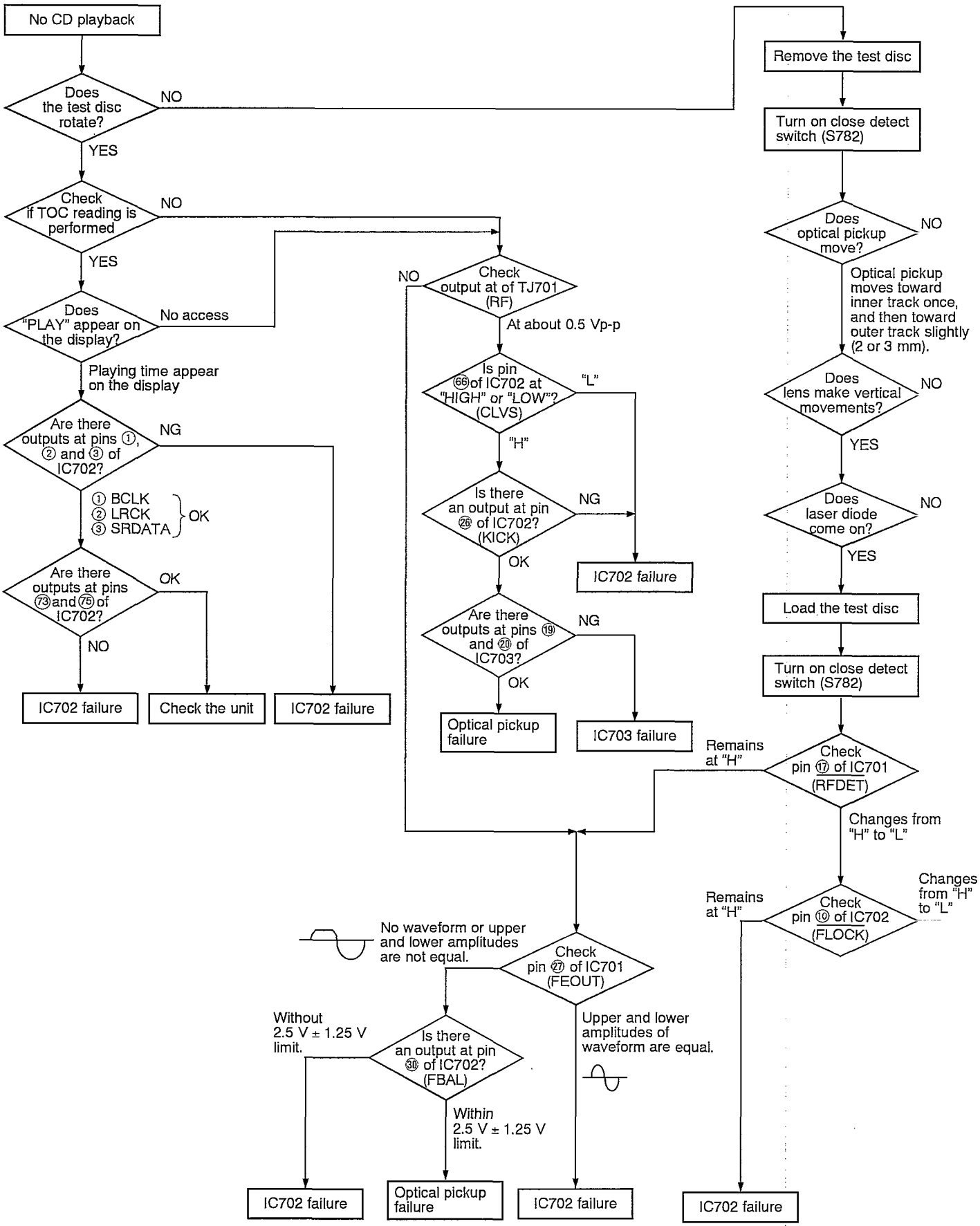

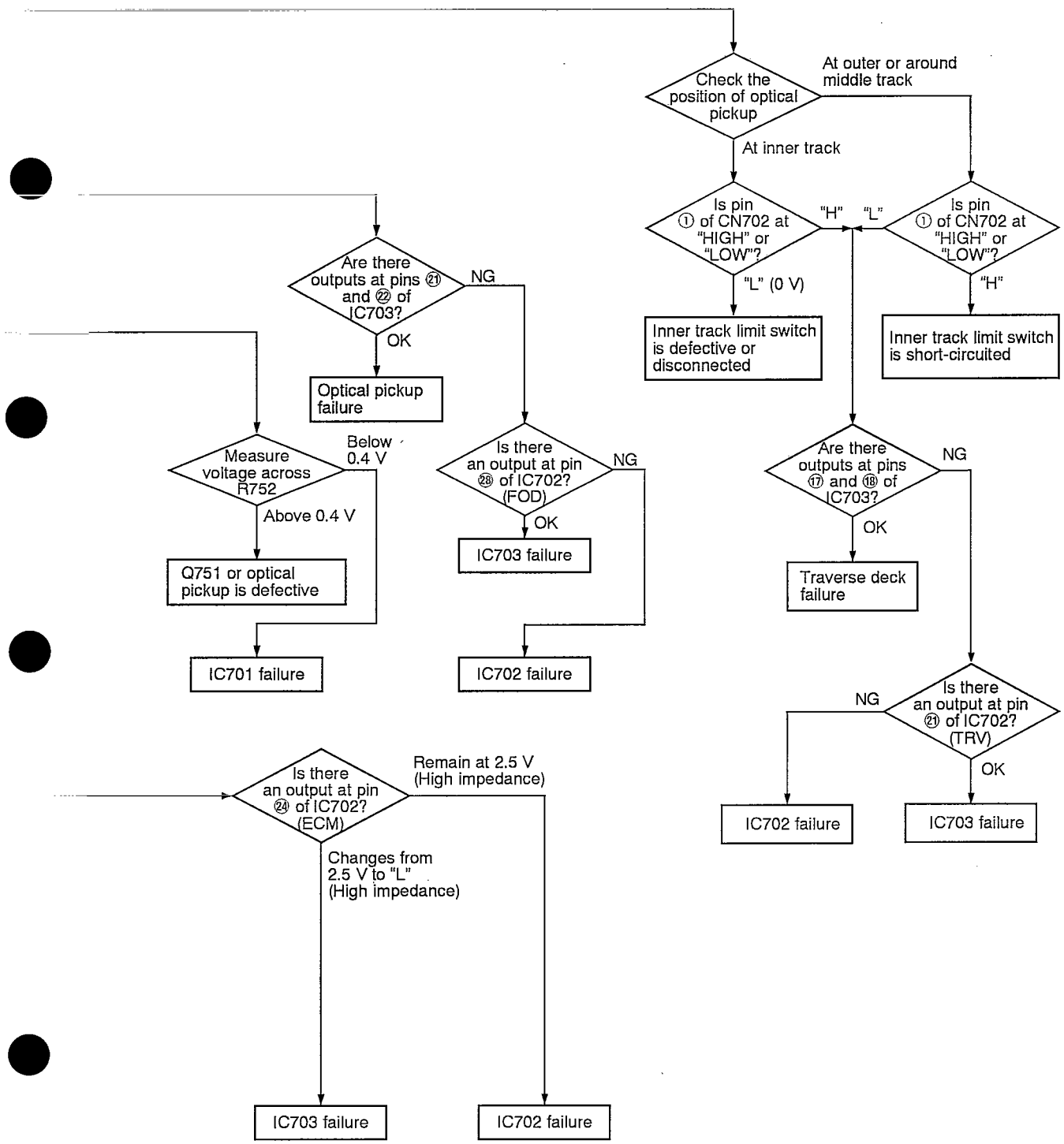
Check the position of optical pickup
At outer or around middle track
At inner track
Is pin ① of CN702 at "HIGH" or "LOW"?
"H"
"L"
Is pin ① of CN702 at "HIGH" or "LOW"?
"L" (0 V)
"H"
Inner track limit switch is defective or disconnected
Inner track limit switch is short-circuited
Are there outputs at pins ㉑ and ㉒ of IC703?
NG
OK
Optical pickup failure
Measure voltage across R752
Below 0.4 V
Above 0.4 V
Q751 or optical pickup is defective
IC701 failure
Is there an output at pin ㉘ of IC702? (FOD)
NG
OK
IC703 failure
IC702 failure
Are there outputs at pins ⑰ and ⑱ of IC703?
NG
OK
Traverse deck failure
Is there an output at pin ㉑ of IC702? (TRV)
NG
OK
IC702 failure
IC703 failure
Is there an output at pin ㉔ of IC702? (ECM)
Remain at 2.5 V (High impedance)
Changes from 2.5 V to "L" (High impedance)
IC703 failure
IC702 failure

■ Function of IC Terminals

• IC401 (UPD78042A014)

Pin No.	Terminal Name	I/O	Function
1 ~ 7	7G ~ 1G	O	FL grid drive signal output
8	VDD	—	Power supply (+ 5V)
9	MCLK	O	Microprocessor command clock
10	MDATA	O	Microprocessor command data
11	STAT	I	Status signal input
12	/MLD	O	Microprocessor command load signal
13	/DMUTE2	O	No used, open
14	SQCK	O	External clock for subcode Q register
15	NC	—	No used, open
16	SUBQ	I	Subcode Q input
17	/RST	I	Reset signal input
18	/OPEN SW	I	Disc tray "open" sense switch status
19	/CLOSE SW	I	Disc tray "close" sense switch status
20	GND	—	Connect to GND
21	/OPEN	O	Open Disc Tray command output
22	/CLOSE	O	Close Disc Tray command output
23	SENSE	I	Sense signal input
24	/FLOCK	I	Focus servo pull-in signal
25	/TLOCK	I	Tracking servo pull-in signal
26	/S RST	O	Reset signal output (for servo)
27	REST SW	I	Innermost track sense switch status
28	/POWER OFF	O	Power off command output
29	VDD	—	Power supply (+ 5V)
30	GND	—	Connect to GND
31	GND	—	Connect to GND
32	NC	—	No used, open
33	GND	—	Connect to GND
34	X1	I	Main clock (4.23 MHz) input
35	X2	O	Main clock output

Pin No.	Terminal Name	I/O	Function
36 ~ 41	P37 ~ P32	I	No used, open
42	P31	I	Connect to GND
43	P30	I	
44	/MRST	O	Reset signal output for MASH (IC801)
45	EMPH	O	Emphasis signal output
46	/DMUTE	O	Muting signal output
47	REMOCON	I	Remote control signal input
48	GND	—	Connect to GND
49	/STANDBY LED	O	STANDBY LED control signal output
50	/PAUSE LED	O	PAUSE LED control signal output
51	/PLAY LED	O	PLAY LED control signal output
52	VDD	—	Power supply (+ 5V)
53	POWER SW	I	Power key switch signal input
54 ~ 58	P126 ~ P122	I	Key return signal input
59 60	P121 P120	—	Connect to GND
61 ~ 66	P16 ~ P11	O	FL anode drive signal and key scan signal output
67 ~ 70	P10 ~ P7	O	FL anode drive signal output
71	VPP	—	Power supply terminal for FL drive (– 32V)
72 ~ 77	P6 ~ P1	O	FL anode drive signal output
78 ~ 80	10G ~ 8G	O	FL grid drive signal output

• IC703 (AN8389SE1)

Pin No.	Terminal Name	I/O	Function
1	Vcc	—	Power supply
2	VREF	I	VREF input
3	IN4	I	Motor driver (4) input
4	IN3	I	Motor driver (3) input
5	GND	—	Ground connection
6	NC	—	Ground connection
7	NRESET	—	Reset input (no used, open)
8	GND	—	Ground connection
9	IN2	I	Motor driver (2) input
10	PC2	I	PC2 (power cut) input
11	IN1	I	Motor driver (1) input
12	PC1	I	PC1(power cut) input

Pin No.	Terminal Name	I/O	Function
13	PVcc1	—	Power supply (1) for driver
14	PGND1	—	Ground connection (1) for driver
15	D1-	O	Motor driver (1) reverse-action output
16	D1+	O	Motor driver (1) forward-action output
17	D2-	O	Motor driver (2) reverse-action output
18	D2+	O	Motor driver (2) forward-action output
19	D3-	O	Motor driver (3) reverse-action output
20	D3+	O	Motor driver (3) forward-action output
21	D4-	O	Motor driver (4) reverse-action output
22	D4+	O	Motor driver (4) forward-action output
23	PGND2	—	Ground connection (2) for driver
24	PVcc2	—	Power supply (2) for driver

• IC701 (AN8805SBE1)

Pin No.	Terminal Name	I/O	Function
1	PD	I	APC amplifier input
2	LD	O	APC amplifier output (No used, open)
3	LD ON/OFF	I	APC ON/OFF control signal
4	REFSW	I	Capacitor connection for CROSS
5	VCC	—	Power supply
6	RF-	I	RF amplifier inversion signal input
7	RF	O	RF amplifier signal output
8	RFIN	I	AGC signal input
9	CAGC	I	AGC loop filter connection
10	ARF	O	AGC signal output
11	CENV	I	Capacitor connection for RF detection
12	CEA	I	Capacitor connection for HPF amplifier
13	CSBDO	I	Capacitor connection for-RF envelope detection
14	EDO	O	BDO signal output
15	CSBRT	I	Capacitor connection for RF envelope detection
16	OFTR	O	OFTR signal output
17	/RFDET	O	RFDET signal output
18	Vss	—	GND
19	ENV	O	3TENV signal output
20	VREF	O	VREF signal output
21	LD OFF	—	APC OFF signal control
22	VDET	O	VDET signal output
23	TEBPF	I	VDET signal input
24	CROSS	O	CROSS signal output
25	TEOUT	O	TE amplifier signal output
26	TE-	I	TE amplifier inversion signal input
27	FEOUT	O	FE amplifier signal output
28	FE-	I	FE amplifier inversion signal input
29	FBAL	I	F BAL control signal
30	TBAL	I	T BAL control signal
31	PDFR	—	Adjustment for I-V amplifier conversion resister
32	PDER	—	Adjustment for I-V amplifier conversion resister
33	E	I	I-V amplifier signal input
34	F	I	I-V amplifier signal input
35	B+D	I	I-V amplifier signal input
36	A+C	I	I-V amplifier signal input

• IC702(MN662713RG1)

Pin No.	Terminal Name	I/O	Function
1	BCLK	O	Bit clock output for serial data
2	LRCK	—	LR identification signal output
3	SRDATA	—	Serial data output
4	DVdd1	—	Power supply input (for digital circuit)
5	DVss1	—	GND (for digital circuit)
6	TX	O	Digital audio interface signal output
7	MCLK	I	Microprocessor command clock signal input (Latches data at first transition)
8	MDATA	I	Microprocessor command data signal input
9	MLD	I	Microprocessor command load signal input
10	SENSE	O	Sense signal output (OFT, FESL, MAGEND, NAJEND, POSAD, SFG)
11	/FLOCK	O	Focus servo feeding signal output ("L": Feed)
12	/TLOCK	O	Tracking servo feeding signal output ("L": Feed)
13	BLKCK	O	Sub-code block clock signal output (fBLKCK = 75 Hz during normal playback) (no used, open)
14	SQCK	I	External clock signal input for sub-code Q resister
15	SUBQ	O	Sub-code Q code output
16	DMUTE	I	Muting input ("H": Mute)
17	STAT	O	Status signal output (CRC, CUE, CLVS, TTSTVP, FCLV, SQCK)
18	/RST	I	Reset input
19	SMCK	—	1/2-divided clock signal of crystal oscillating at MSEL = "H" (fSMCK = 8.4672 MHz) 1/4-divided clock signal of crystal oscillating at MSEL = "L" (fSMCK = 4.2336 MHz)(no used,open)
20	PMCK	—	1/192-divided clock signal of crystal oscillating (fPMCK = 88.2 kHz) (no used,open)
21	TRV	O	Traverse forced feed output
22	TVD	O	Traverse drive output
23	PC	O	Spindle motor ON signal output ("L": ON)
24	ECM	O	Spindle motor drive signal output (forced mode output)
25	ECS	O	Spindle motor drive signal output (servo error signal output)
26	KICK	O	Kick pulse output
27	TRD	O	Tracking drive output
28	FOD	O	Focus drive output
29	VREF	I	D/A (drive) output (TVD, ECS, TRD, FOD, FBAL, TBAL) reference voltage input
30	FBAL	O	Focus balance adjustment output
31	TBAL	O	Tracking balance adjustment output

• IC702 Continued

Pin No.	Terminal Name	I/O	Function
32	FE	I	Focus error signal input (analog input)
33	TE	I	Tracking error signal input (analog input)
34	RFENV	I	RF envelope signal input
35	VDET	I	Vibration detection signal input ("H": detection)
36	OFT	I	Off-track signal input ("H": off track)
37	TRCRS	I	Track cross signal input
38	/RFDET	I	RF detection signal input ("L": detection)
39	BDO	I	Dropout signal input ("H": Dropout)
40	LDON	O	Laser on signal output ("H": ON)
41	TES	O	Tracking error shunt signal output ("H": shunt) (no used, open)
42	PLAY	O	Play signal out ("H": PLAY) (no used, open)
43	WVEL	O	Double speed status signal output ("H": Double speed) (no used, open)
44	ARF	I	RF signal input
45	IREF	I	Reference current input
46	DRF	—	DSL bias (no used, open)
47	DSLF	I/O	DSL loop filter
48	PLLF	I/O	PLL loop filter
49	VCOF	I/O	VCO loop filter
50	AVdd2	—	Power supply input (for analog circuit)
51	AVss2	—	GND (for analog circuit)
52	EFM	—	EFM signal output (not used, open)
53	PCK	—	PLL extraction clock output (fPCK= 4.321MHz during normal playback) (no used, open)
54	PDO	—	Phase comparison signal of EFM and PCK signals (no used, open)
55	SUBC	O	Sub-code serial data output (no used, open)
56	SBCK	I	Clock input for sub-code serial data
57	Vss	—	GND
58	X1	I	Crystal oscillating circuit input (f = 16.9344MHz)
59	X2	O	Crystal oscillating circuit output (f = 16.9344MHz)
60	Vdd	—	Power supply input (for oscillating circuit)
61	BYTCK	—	Byte clock output (no used, open)
62	/CLDCK	O	Sub-code frame clock signal output (fCLDCK = 7.35kHz during normal playback)
63	FCLK	—	Crystal frame clock signal output (fFCLK = 7.35kHz, double = 14.7kHz)
64	IPFLAG	O	Interpolation flag output ("H": Interpolation) (no used, open)
65	FLAG	O	Flag output (no used, open)

Pin No.	Terminal Name	I/O	Function
66	CLVS	O	Spindle servo phase synchronizing signal output ("H": CLV, "L": rough servo) (no used, open)
67	CRC	O	Sub-code CRC checked output ("H": OK, "L": NG) (no used, open)
68	DEMPH	O	De-emphasis ON signal output ("H": ON) (no used, open)
69	RESY	—	Frame resynchronizing signal output (no used, open)
70	/RST2	I	Reset input through MASH circuit ("L": Reset)
71	/TEST	I	Test input
72	AVdd1	—	Power supply input (for analog circuit)
73	OUTL	O	Left channel audio signal output
74	AVss1	—	GND
75	OUTR	O	Right channel audio signal output
76	RSEL	I	RF signal polarity assignment input (at "H" level: RSEL = "H") (at "L" level: RSEL = "L")
77	CSEL	I	Crystal oscillating frequency designation input ("L": 16.9344MHz, "H": 33.8688MHz)
78	PSEL	I	Test input (normally, "L")
79	MSEL	I	Output frequency switching for SMCK terminal "H": SMCK = 8.4672MHz "L": SMCK = 4.2336MHz
80	SSEL	I	Output mode switching of SUBQ terminal ("H": Q code buffer mode)

■ Replacement Parts List

Notes: *Important safety notice:
Components identified by ⚠ mark have special characteristics important for safety.
Furthermore, special parts which have purposes of fire-retardant (resistors), high-quality sound (capacitors), low-noise (resistors), etc. are used.
When replacing any of components, be sure to use only manufacture's specified parts shown in the parts list.
*The parenthesized indications in the Remarks columns specify the areas. (Refer to the cover page for area.)
Parts without these indications can be used for all areas.
*Remote Control Ass'y: Supply period for three years from termination of production.
*[MB] Indicates in Remarks columns parts that are supplied by MBV.
*Warning: This product uses a laser diode. Refer to caution statements on page 2.
*ACHTUNG: Die lasereinheit nicht zerlegen.
Die lasereinheit darf nur gegen eine vom hersteller spezifizierte einheit ausgetauscht werden.
*The "(SF)" mark denotes the standard part.

Ref. No.	Part No.	Part Name & Description	Remarks
		INTEGRATED CIRCUIT(S)	
IC11	LM2940T5	IC, REGULATOR	⚠
IC401	UPD78042A014	IC, SYSTEM CONTROL	[MB]
IC651	RCDHC-212	IC, REMOTE SENSOR	
IC701	AN8805SBE1	IC, SERVO AMP	[MB]
IC702	MN662713RG1	IC, SERVO PROCESSOR	[MB]
IC703	AN8389SE1	IC, MOTOR DRIVE	
IC781	TA7291SA	IC, MOTOR DRIVE	
IC801	BA4560FE1	IC, L. P. F. AMP	[MB]
IC871	BA4560N	IC, HEADPHONES AMP.	
		TRANSISTOR(S)	
Q11	2SD2037EFTA	TRANSISTOR	⚠
Q12	2SD1862QSTV6	TRANSISTOR	[MB]
Q13	2SB1240QSTV6	TRANSISTOR	⚠[MB]
Q14	2SA933SQR	TRANSISTOR	⚠
Q15	2SA933SQR	TRANSISTOR	
Q16	2SB1238QSTV6	TRANSISTOR	⚠
Q19, 20	2SD1450RTA	TRANSISTOR	
Q21	DTA124ESTP	TRANSISTOR	⚠
Q22	2SC1740SQ	TRANSISTOR	
Q51, 52	2SC1740SQ	TRANSISTOR	
Q401, 402	2SD1862QSTV6	TRANSISTOR	⚠[MB]
Q751	2SA933SQR	TRANSISTOR	
Q752	2SC1740SQ	TRANSISTOR	
Q801, 802	2SD1450RTA	TRANSISTOR	
Q803, 804	2SC1740SQ	TRANSISTOR	
Q851	DTC124EST	TRANSISTOR	
Q853	DTA114ESTP	TRANSISTOR	
Q871, 872	2SD1450RTA	TRANSISTOR	
		DIODE(S)	
D11-18	1D3-E	DIODE	⚠[MB]
D19	MA4330MTA	DIODE	⚠
D20	1SS254TA	DIODE	
D21	MA4082MTA	DIODE	⚠
D22	MA4091-M	DIODE	⚠
D25, 26	1SS254TA	DIODE	
D51	MA4039MTA	DIODE	
D401	MA4056MTA	DIODE	⚠
D402	1D3-E	DIODE	[MB]

Ref. No.	Part No.	Part Name & Description	Remarks
D601-606	1SS254TA	DIODE	
D651	SLR-305LC	LED	
D701	1SS254TA	DIODE	
D801-804	1SS254TA	DIODE	
D861	1SS254TA	DIODE	
		VARIABLE RESISTOR(S)	
VR871	EWCU1AF15A15	V. R, HEADPHONES LEVEL	[MB]
		COIL(S)	
L871, 872	RLQZN3R3KL-D	COIL	[MB]
L874	RLQZN4R7KL-D	COIL	
		TRANSFORMER(S)	
T1	RTP1K4B024	POWER TRANSFORMER	⚠[MB]
		OSCILLATOR(S)	
X401	RSXY4M23M01T	OSCILLATOR	
X701	RSXZ16M9M01T	OSCILLATOR	
		DISPLAY TUBE	
FL601	RSL0193-F	DISPLAY TUBE	[MB]
		SWITCH(ES)	
S601	EVQ21405R	SW, TIME MODE	
S602	EVQ21405R	SW, AUTO CUE	
S603	EVQ21405R	SW, TIME FADE	
S604	EVQ21405R	SW, PEAK SEARCH	
S605	EVQ21405R	SW, RANDAM	
S607	EVQ21405R	SW, 2	
S606	EVQ21405R	SW, 1	
S608	EVQ21405R	SW, 3	
S609	EVQ21405R	SW, 4.	
S610	EVQ21405R	SW, 5	
S611	EVQ21405R	SW, 0	
S612	EVQ21405R	SW, 9	
S613	EVQ21405R	SW, 8	
S614	EVQ21405R	SW, 7	
S615	EVQ21405R	SW, 6	

Ref. No.	Part No.	Part Name & Description	Remarks
S618	EVQ21405R	SW, SIDE A/B	
S619	EVQ21405R	SW, TAPE LENGTH	
S620	EVQ21405R	SW, 10	
S621	EVQ21405R	SW, F. SKIP	
S622	EVQ21405R	SW, PAUSE	
S623	EVQ21405R	SW, OPEN/CLOSE	
S624	EVQ21405R	SW, PROGRAM	
S625	EVQ21405R	SW, REPEAT	
S626	EVQ21405R	SW, STOP	
S627	EVQ21405R	SW, PLAY	
S628	EVQ21405R	SW, R. SKIP	
S629	EVQ21405R	SW, CLEAR	
S630	EVQ21405R	SW, RECALL	
S651	EVQ21405R	SW, POWER	
S781	RSH1A005	SW, TRAY OPEN DET.	
S782	RSH1A005	SW, TRAY CLOSE DET.	
		CONNECTOR (S)	
CN401	RJS1A6823	SOCKET (23P)	
CN402	RJT029W06VT	CONNECTOR (6P)	
CN411	RJU076W24M1	SOCKET (24P)	[MB]
CN611	RJT076W24M	SOCKET (24P)	[MB]
CN701	RJS12Q9ZA	SOCKET (12P)	[MB]
CN702	RJS1A6723-1Q	SOCKET (23P)	
CN703	RJT029W06VT	CONNECTOR (6P)	
CN781	RJP6G17ZA	PLUG (6P)	
CN871	RJS2A2107T	SOCKET (7P)	[MB]
CN891	RJS2A2107T	SOCKET (7P)	[MB]
		EARTH PLATE	
GND871	RMC0184	EARTH PLATE	[MB]
		JACK	
JK1	SJS9236	AC INLET	⚠
JK801	RJH3201N	LINE OUT	
JK871	QJA0455ZC	HEADPHONES JACK	

Notes : * Capacity values are in microfarads (uF) unless specified otherwise, P=Pico-farads(pF) F=Farads(F)
* Resistance values are in ohms, unless specified otherwise, 1K=1,000(OHM) , 1M=1,000k(OHM)

Ref. No.	Part No.	Values & Remarks
		RESISTORS
R1	ERQ16NKWR15E	1W 0.15
R12, 13	ERDS2TJ102	1/4W 1K
R14	ERDS2TJ103	1/4W 10K
R15	ERDS2TJ822	1/4W 8.2K
R16	ERDS2TJ680T	1/4W 68
R17	ERDS2TJ331	1/4W 330
R18	ERDS2TJ473	1/4W 47K
R19	ERDS2TJ472	1/4W 4.7K
R23	ERDS2TJ103	1/4W 10K
R28-30	ERDS2TJ103	1/4W 10K
R51	ERDS2TJ331	1/4W 330
R52	ERDS2TJ272T	1/4W 2.7K
R53, 54	ERDS2TJ472	1/4W 4.7K
R401	ERDS2TJ102	1/4W 1K
R403, 404	ERDS2TJ103	1/4W 10K
R405, 406	ERDS2TJ221	1/4W 220
R407	ERDS2TJ101	1/4W 100
R408-411	ERDS2TJ103	1/4W 10K
R451-455	ERDS2TJ471	1/4W 470
R601	ERDS2TJ180T	1/4W 18
R651	ERDS2TJ221	1/4W 220
R701	ERDS2TJ561	1/4W 560
R703	ERDS2TJ823T	1/4W 82K
R707, 708	ERDS2TJ334	1/4W 330K
R709	ERDS2TJ683	1/4W 68K
R711	ERDS2TJ154	1/4W 150K
R712	ERDS2TJ221	1/4W 220
R717, 718	ERDS2TJ102	1/4W 1K
R721	ERDS2TJ101	1/4W 100
R722	ERDS2TJ683	1/4W 68K
R723	ERDS2TJ183T	1/4W 18K
R724	ERDS2TJ393	1/4W 39K
R725	ERDS2TJ472	1/4W 4.7K
R726	ERDS2TJ474	1/4W 470K
R727	ERDS2TJ153	1/4W 15K
R728	ERDS2TJ822	1/4W 8.2K
R731	ERDS2TJ223	1/4W 22K
R732	ERDS2TJ183T	1/4W 18K
R733	ERDS2TJ822	1/4W 8.2K
R735, 736	ERDS2TJ101	1/4W 100
R745	ERDS2TJ155	1/4W 1.5M
R751	ERDS2TJ102	1/4W 1K
R752, 753	ERDS2TJ392T	1/4W 3.9K
R754	ERDS2TJ103	1/4W 10K
R761, 762	ERDS2TJ103	1/4W 10K
R763	ERDS2TJ823T	1/4W 82K

Ref. No.	Part No.	Values & Remarks
R764	ERDS2TJ393	1/4W 39K
R765	ERDS2TJ224T	1/4W 220K
R766	ERDS2TJ104	1/4W 100K
R772, 773	ERDS2TJ220T	1/4W 22
R775, 776	ERDS2TJ392T	1/4W 3.9K
R777	ERDS2TJ102	1/4W 1K
R801, 802	ERDS2TJ102	1/4W 1K
R803, 804	ERDS2TJ224T	1/4W 220K
R805, 806	ERDS2TJ822	1/4W 8.2K
R807, 808	ERDS2TJ123	1/4W 12K
R809-812	ERDS2TJ333	1/4W 33K
R813, 814	ERDS2TJ331	1/4W 330
R815, 816	ERDS2TJ102	1/4W 1K
R817, 818	ERDS2TJ473	1/4W 47K
R819, 820	ERDS2TJ100	1/4W 10
R821, 822	ERDS2TJ471	1/4W 470
R852	ERDS2TJ222	1/4W 2.2K
R871, 872	ERDS2TJ473	1/4W 47K
R873-876	ERDS2TJ104	1/4W 100K
R885, 886	ERDS2TJ222	1/4W 2.2K
R887, 888	ERDS2TJ101	1/4W 100
R889, 890	ERDS2TJ473	1/4W 47K
		CAPACITORS
C1	ECFTD103KXL	50V 0.01U
C10	ECFR1E104ZF5	25V 0.1U
C11 ⚠	ECA1CM222B	16V 2200U
C12	ECBT1C103NS5	16V 0.01U
C14	ECEA0JKA470B	6.3V 47U
C15 ⚠	ECA1EPXS101B	25V 100U
C16 ⚠	ECA1EPXS331B	25V 330U [MB]
C17, 18	ECEA1HU101	50V 100U
C19	ECEA1EU101	25V 100U
C20, 21	ECA1EPXS101B	25V 100U
C22	ECEA1AU331	10V 330U
C401	ECBT1C103NS5	16V 0.01U
C402	ECEA0JU102	6.3V 1000U
C404	ECBT1C103NS5	16V 0.01U
C405	ECEA0JKA101B	6.3V 100U
C451-455	ECBT1H101KB5	50V 100P
C703	ECEA0JKA101I	6.3V 100U
C704	ECFR1E104ZF5	25V 0.1U
C705	ECEA1HKA010I	50V 1U
C706	ECBT1H101KB5	50V 100P
C707	ECFR1C273KR	16V 0.027U
C708	ECBT1C472MR5	16V 4700P
C709	ECFR1C473KR	16V 0.047U
C714	ECEA0JKA101I	6.3V 100U

Ref. No.	Part No.	Values & Remarks
C716	ECBT1H561KB5	50V 560P
C717	ECFR1E104ZF5	25V 0.1U
C718	RCQ52C0224J9	63V 0.22U [MB]
C721, 722	ECBT1H270J5	50V 27P
C723	ECEA0JKA221I	6.3V 220U
C724	ECFR1E104ZF5	25V 0.1U
C725, 726	ECBT1H102KB5	50V 1000P
C727, 728	ECEA1HKA010I	50V 1U
C730	ECFR1E104ZF5	25V 0.1U
C731, 732	ECEA0JKA221I	6.3V 220U
C733	ECFR1E104ZF5	25V 0.1U
C734	ECEA1AKA221I	10V 220U
C735-737	ECBT1E223ZF	25V 0.022U
C738	ECFR1C183KR	16V 0.018U
C739	ECBT1C152MR5	16V 1500P
C740	ECBT1C272MR5	16V 2700P
C742	ECFR1C273KR	16V 0.027U
C743	ECBT1E223ZF	25V 0.022U
C744	ECBT1C822MS5	16V 8200P
C747, 748	ECBT1C103NS5	16V 0.01U
C751	ECEA1CKA100I	16V 10U
C752	ECFR1E104ZF5	25V 0.1U
C765	ECBT1H331KB5	50V 330P
C766	ECBT1H391KB5	50V 390P
C767	ECEA1HKN010I	50V 1U
C768	ECFR1E682KR	25V 6800P
C769	ECBT1C222MR5	16V 2200P
C772-775	ECFR1E104ZF5	25V 0.1U
C776	ECBT1H180J5	50V 18P
C777	ECBT1H680J5	50V 68P
C781	ECEA1AKA101I	10V 100U
C803-806	ECBT1H391KB5	50V 390P
C807, 808	ECA1CPXS470B	16V 47U
C809, 810	ECBT1H102KB5	50V 1000P
C817	ECFR1E104ZF5	25V 0.1U
C871, 872	ECEA1EKN3R3B	25V 3.3U
C873, 874	ECQB1H103JF3	50V 0.01U
C875-880	ECBT1C103NS5	16V 0.01U
C881, 882	ECEA1AN101XB	10V 100U

■ Cabinet Parts Location

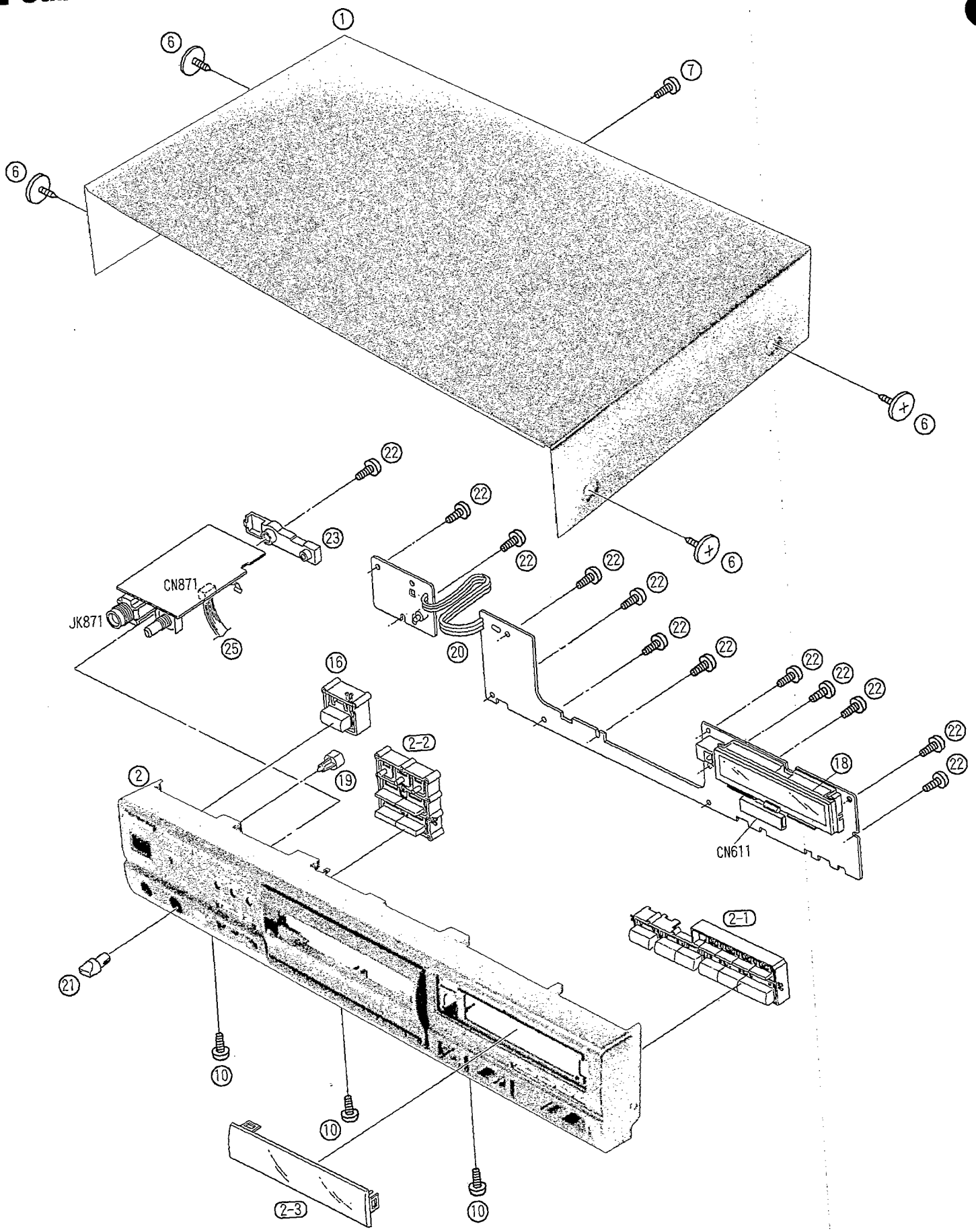

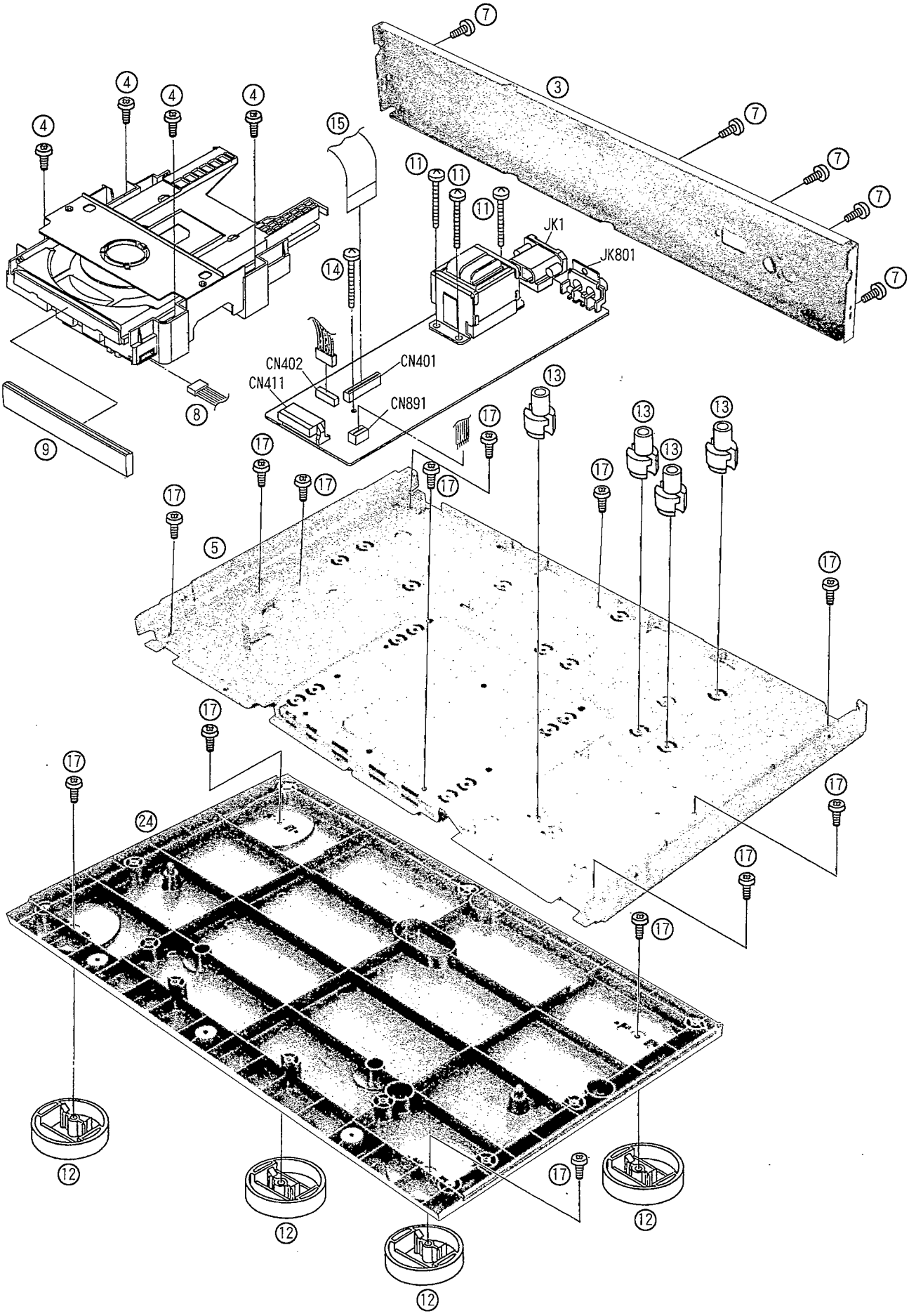
7
3
7
7
7
7
4
4
4
4
15
11
11
11
JK1
JK801
14
CN402
CN401
CN411
CN891
8
9
13
13
13
13
17
17
17
17
17
17
17
17
17
17
17
5
24
12
12
12
12

■ Loading Unit Parts Location

Note:
When changing mechanism parts, apply the specified grease to areas marked "xx" as shown in the drawing.

Ref No.	Part No.
❶	RFKXEM30L

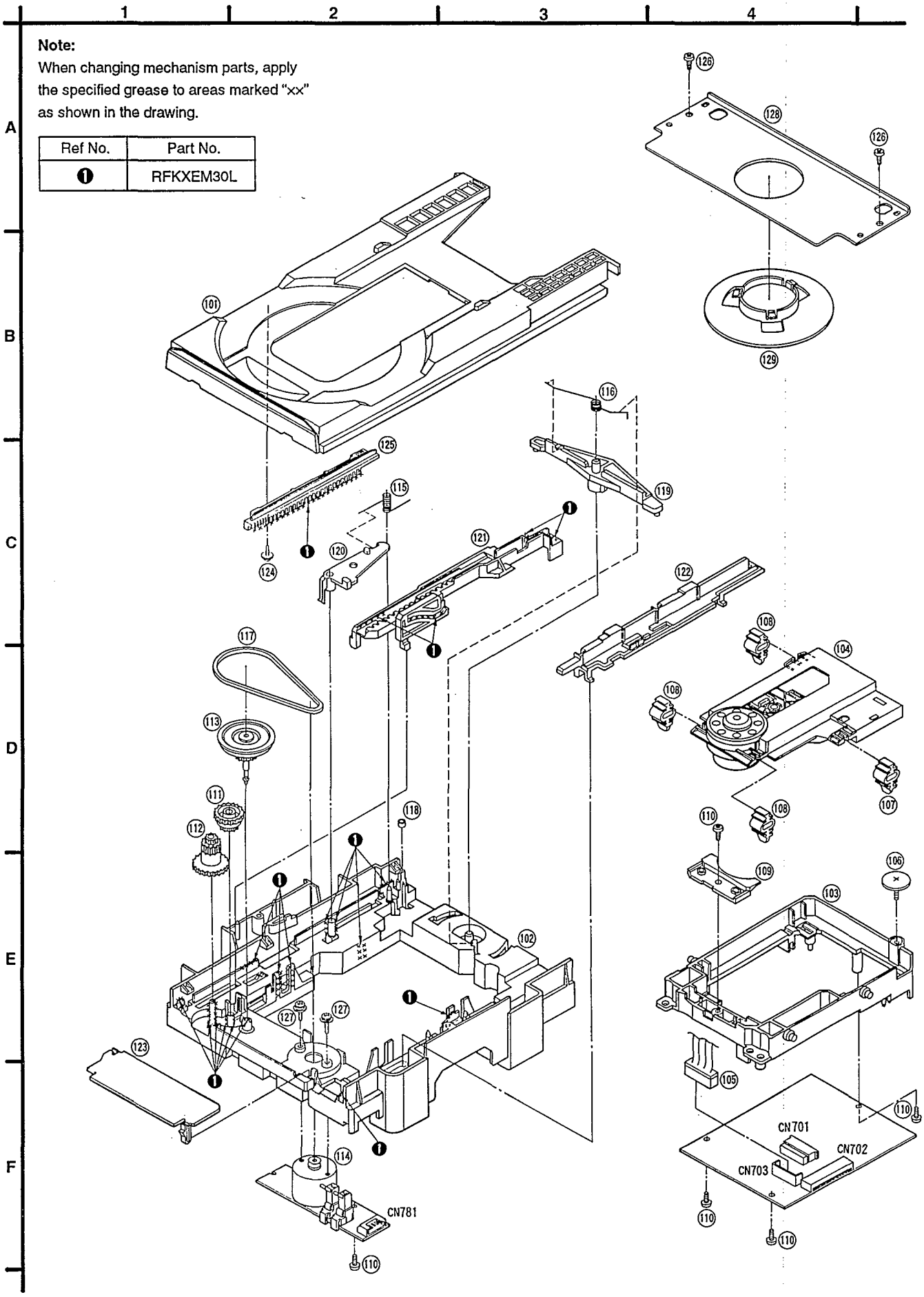

Note: The reference number SA represent the grease and tool used for this unit.

Ref. No.	Part No.	Part Name & Description	Remarks
		CABINET PARTS	
1	RKM0098-K	CABINET	[MB]
2	RYP0566Z-K	FRONT PANEL ASS'Y	[MB]
2-1	RGU1197-K	MAIN BUTTON	[MB]
2-2	RGU1198-K	SUB BUTTON	[MB]
2-3	RKW0377-R	FL PANEL	[MB]
3	RFKHLPG570AE	REAR PANEL	(EB) [MB]
3	RGR0154E-A	REAR PANEL	(E, EG, ER) [MB]
3	RGR0154E-D	REAR PANEL	(EZ) [MB]
4	XTB3+8JFZ	SCREW	
5	RMK0179-2	BOTTOM CHASSIS	[MB]
6	RHD30035-K1	SCREW	
7	XTBS3+8JFZ1	SCREW	
8	REX0577	CABLE ASS'Y(6P)	[MB]
9	RGK0703-K	ORNAMENT	[MB]
10	XTB3+10JFZ	SCREW	
11	RHD30053	SCREW	[MB]
12	RKA0040B-K1	FOOT	[MB]
13	RMR0377-1	P. C. B. SUPPORT	[MB]
14	XTB3+20JFZ	SCREW	
15	RWJ5223130EE	FFC(23P)	[MB]
16	RGU1029-K	POWER BUTTON	[MB]
17	XTB3+10GFZ	SCREW	
18	RMR1825-K	FL HOLDER	[MB]
19	RGL0267-Q	LED INDICATOR	[MB]
20	RWJ1803150KK	FLAT CABLE(3P)	
21	RGW0048	H. P. VOLUME KNOB	
22	RHD26021	SCREW	[MB]
23	RMN0306	HOLDER	[MB]
24	RKU0052-K1	BOTTOM BASE	[MB]
25	RWJ6807450XX	FLAT CABLE(7P)	[MB]
		PACKING MATERIALS	
P1	RPG2353	PACKING CASE	[MB]
P2	RPN0860	CUSHION	[MB]
P3	XZB23X35C03	PROTECTION COVER	
P4	SPP730	PROTECTION COVER	
		ACCESSORIES	
A1	EUR643900	REMOTE CONTROL	[MB]
A1-1	UR64EC1638	BATTERY COVER	[MB]
A2	RJA0044-C	AC MAINS LEAD	(EB) [MB] ⚠
A2	RJA0043-C	AC MAINS LEAD	(E, EG, EZ, ER) [MB] ⚠
A3	RFKSLPG570AE	INSTRUCTION MANUAL	(E, ER) [MB]
A3	RQT2738-B	INSTRUCTION MANUAL	(EB) [MB]
A3	RQT2739-D	INSTRUCTION MANUAL	(EG) [MB]
A3	RFKSLPG470AZ	INSTRUCTION MANUAL	(EZ) [MB]
A4	SJP2276	STEREO CONNECTION CABLE	
A5	RQA0013	WARRANTY CARD	
A6	RQCB0169	SERVICE CENTER LIST	

Ref. No.	Part No.	Part Name & Description	Remarks
		LOADING UNIT PARTS	
101	RGQ0130-K	TRAY	[MB]
102	RFKJLPG460AE	MECHANISM CHASSIS ASS'Y	[MB]
103	RMR0719-W1	MID. CHASSIS	[MB]
104	RAE1100Z-1	TRAVERSE UNIT	[MB]
105	REX0576	CABLE ASS'Y	[MB]
106	RHD30047	SCREW	[MB]
107	RMG0337-K	DAMPING RUBBER	[MB]
108	RMG0337-Q	DAMPING RUBBER	[MB]
109	RMR0750-W	STOPPER	[MB]
110	XTBS26+8J	SCREW	
111	RDG0142	RELAY GEAR	
112	RDG0259	DRIVE GEAR	[MB]
113	RDP0065	RELAY PULLY	
114	REM0047	MOTOR ASS'Y	[MB]
115	RME0063	LOCK LEVER SPRING	
116	RME0087	ASSIST SPRING	
117	RMG0158	BELT	
118	RMG0338-Q	STOPPER RUBBER	[MB]
119	RML0177	CHANGE LEVER	
120	RML0178-1	LOCK LEVER	
121	RMM0112	SLIDE PLATE 1	[MB]
122	RMM0113	SLIDE PLATE 2	[MB]
123	RMR0721-K	GEAR COVER	[MB]
124	RHD20009-1	SCREW	
125	RFKNLPG460AA	DRIVE RACK ASS'Y	[MB]
126	XTB3+8JFZ	SCREW	
127	XYN2+F6FZ	SCREW	
128	RFKNLPG460AB	CLAMP BASE ASS'Y	[MB]
129	RFKNLPG460AC	CLAMPER ASS'Y	[MB]
		GREASE OR TOOL	
SA1	RFKXEM30L	GREASE	
SA2	SZZP1054C	TEST DISC	

■ Packaging

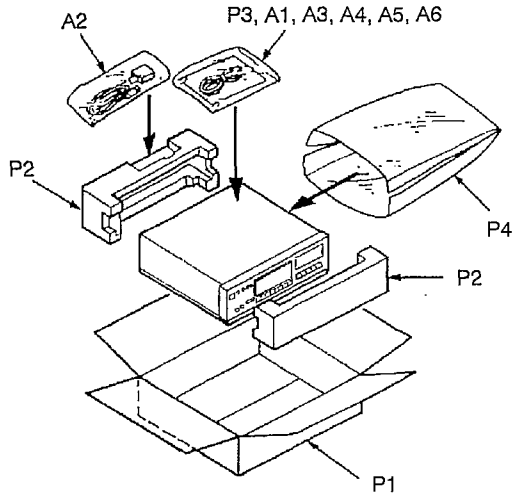

Printed in Germany
MBV F9502 TW/TT/YU

1014